# TBMA

## Test Board for MagAlpha Sensors User Guide

## DESCRIPTION

The TBMA is a test board for the MagAlpha magnetic position sensor family. The TBMA allows users to run and test MagAlpha sensors quickly. TBMA boards come in long (LT) format, where the sensor is mounted on the edge of the board, and they can be used in both side-shaft and end-of-shaft configurations.

TBMA test boards are compatible with the MACOM evaluation kit and EVKT-MagAlpha-MagDiff, offering seamless connection and operation of MagAlpha sensors. In addition, these boards allow users to evaluate MagAlpha functionalities and performances with their own set-up.

The TBMA test board only includes the assembled board with the sensor and decoupling capacitors and connectors. It does not include connectors for certain board types.

## FEATURES

- Evaluation Board Supports Side-Shaft and End-of-Shaft Mounting
- Compatible with the EVKT-MagAlpha-MagDiff [(1)]

## APPLICATIONS

- Servo Drives
- Robotics
- Automotive
- Brushless DC (BLDC) Motor Commutation
- Encoders

All MPS parts are lead-free, halogen-free, and adhere to the RoHS directive. For MPS green status, please visit the MPS website under Quality Assurance. “MPS”, the MPS logo, and “Simple, Easy Solutions” are registered trademarks of Monolithic Power Systems, Inc. or its subsidiaries.

**Note:**

1) The TBMA is also compatible with the EVKT-MACOM.

## OVERVIEW

**Figure 1: TBMA Test Boards**


MPS Proprietary Information. Patent Protected. Unauthorized Photocopy and Duplication Prohibited.
© 2023 MPS. All Rights Reserved.

## BOARD TYPES

Different board types are available, and each has a different schematic and layout design (see Table 1). Determine which board type to use based on the selected sensor part number. The board can be used for both end-of-shaft and side-shaft configuration.

**Table 1: Board Type**

| Board Type | Board Part Number | MPS Chip Part Number |
|---|---|---|
| BOARD TYPE **1** | TBMA100-Q-LT | MA100 |
| | TBMA300-Q-LT | MA300 |
| | TBMA700-Q-LT | MA700 |
| | TBMA750-Q-LT | MA750 |
| Board type 2 | TBMA102-Q-LT | MA102 |
| | TBMA302-Q-LT | MA302 |
| | TBMA310-Q-LT | MA310 |
| | TBMA702-Q-LT | MA702 |
| | TBMA710-Q-LT | MA710 |
| | TBMA730-Q-LT | MA730 |
| | TBMA800-Q-LT | MA800 |
| | TBMA820-Q-LT | MA820 |
| | TBMA850-Q-LT | MA850 |
| | TBMA704-Q-LT | MA704 |
| | TBMA330-Q-LT | MA330 |
| | TBMA732-Q-LT | MA732 |
| | TBMAQ430-Q-LT | MAQ430 |
| | TBMAQ470-Q-LT | MAQ470 |
| | TBMAQ473-Q-LT | MAQ473 |
| Board type 3 | TBMA780-Q-LT | MA780 |
| Board type 4 | TBMA782-Q-LT | MA782 |
| Board type 5 | TBMA734-Q-LT | MA734 |
| Board type 6 | TBMA735-Q-LT | MA735 |
| Board type 7 | TBMA736-Q-LT | MA736 |


MPS Proprietary Information. Patent Protected. Unauthorized Photocopy and Duplication Prohibited.
© 2023 MPS. All Rights Reserved.

## TBMA CONTENTS

Figure 2 shows the TBMA test board contents, with each element described in the list below:

1. One TBMA board with a mounted MagAlpha sensor
2. Decoupling capacitors
3. Connector

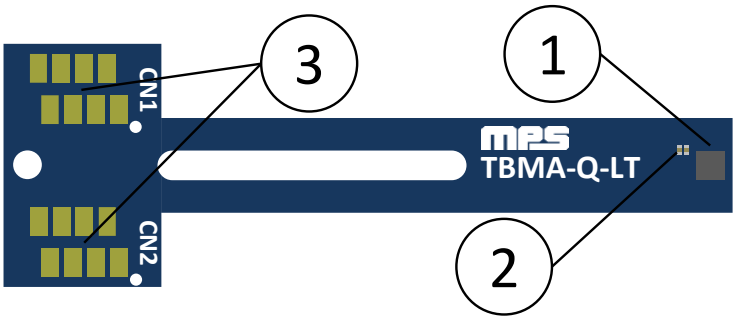


**Figure 2: TBMA Contents**


MPS Proprietary Information. Patent Protected. Unauthorized Photocopy and Duplication Prohibited.
© 2023 MPS. All Rights Reserved.

## BOARD TYPE 1

Figure 3 shows an overview of the type 1 long (LT) board.

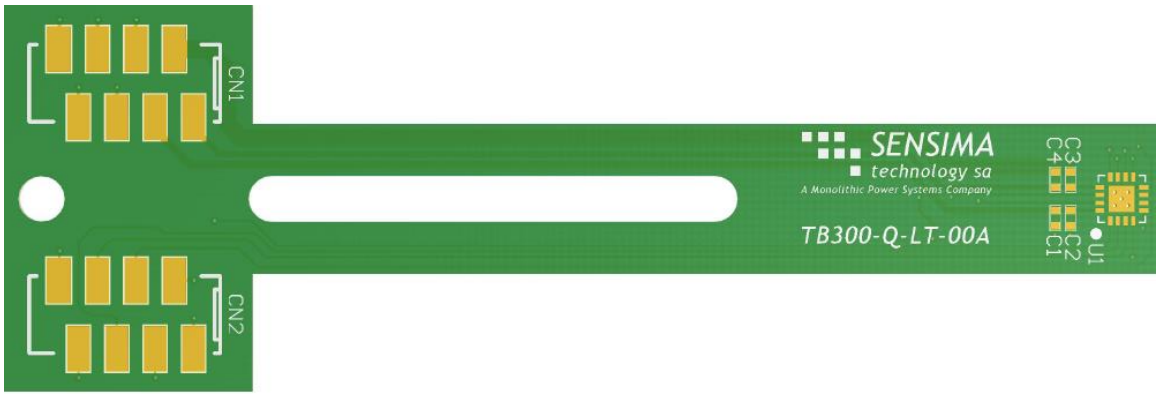


**Figure 3: Type 1 Board Overview**

### Schematic

Figure 4 shows a schematic for the type 1 board.

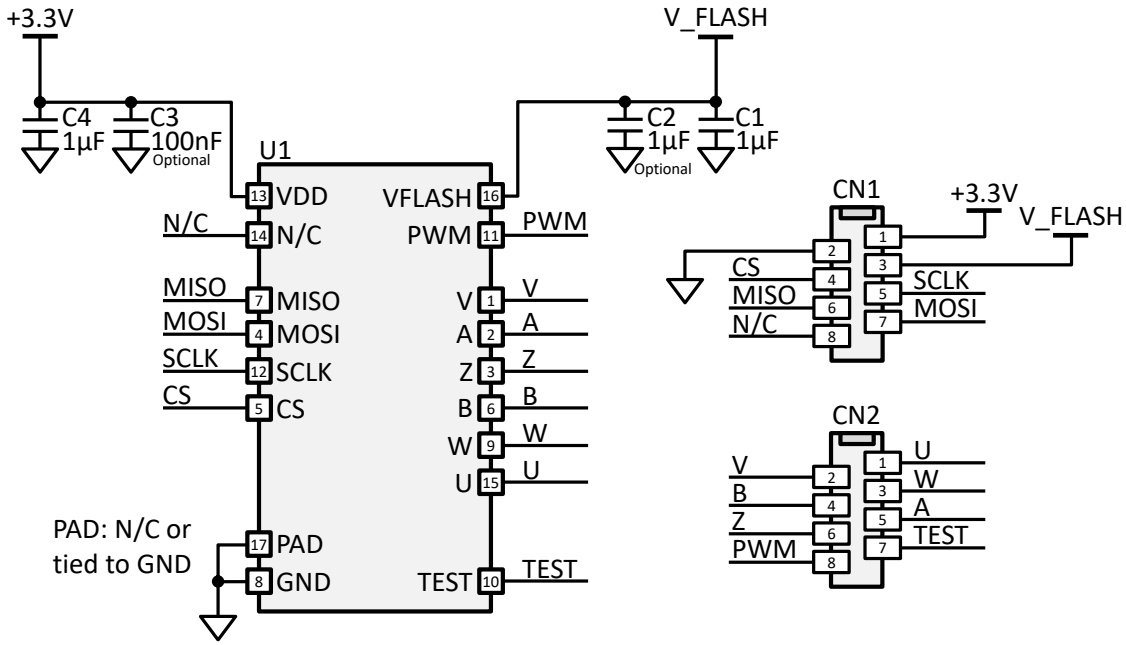


**Figure 4: Type 1 Board Schematic**


MPS Proprietary Information. Patent Protected. Unauthorized Photocopy and Duplication Prohibited.
© 2023 MPS. All Rights Reserved.

## Bill of Materials (BOM)

Table 2 shows the type 1 board bill of materials (BOM).

**Table 2: Type 1 Board BOM**

| Qty | Ref | Value | Description | Manufacturer | Manufacturer PN |
|---|---|---|---|---|---|
| 2 | C1, C4 | 1µF | Ceramic capacitor, 10V, X6S, 0402 | Murata | GRM155C81A105KA12D |
| 1 | C2 (optional) | 1µF | Ceramic capacitor, 10V, X6S, 0402 | Murata | GRM155C81A105KA12D |
| 1 | C3 (optional) | 100nF | Ceramic capacitor, 16V, X7R, 0402 | Murata | GRM155R71C104KA88J |
| 1 | U1 | MAxxx | MagAlpha magnetic position sensor | MPS | N/A |
| 2 | CN1, CN2 (not populated) | 2.54mm | 8-position receptacle connector, 0.100” (2.54mm), surface-mount tin | Wurth or TE Connectivity | 690367280876 or 7-2178711-8 |

## Assembly View

Figure 5 shows the top-side assembly view of the type 1 board.

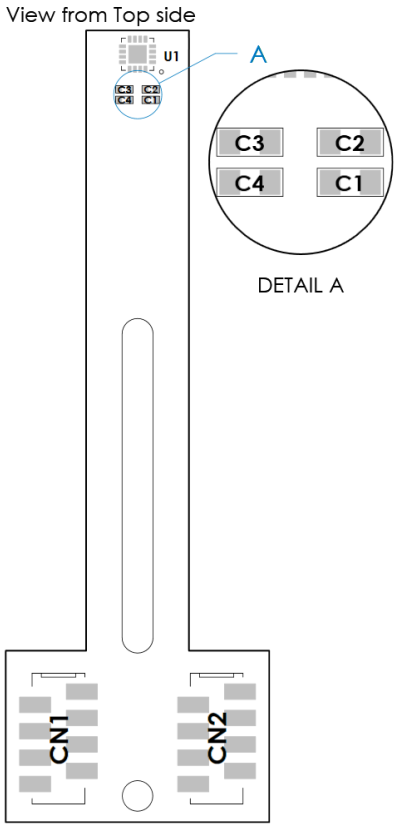


**Figure 5: Type 1 Board Assembly View**


MPS Proprietary Information. Patent Protected. Unauthorized Photocopy and Duplication Prohibited.
© 2023 MPS. All Rights Reserved.

## Mechanical Drawing

Figure 6 shows the top-side mechanical drawing of the type 1 board.

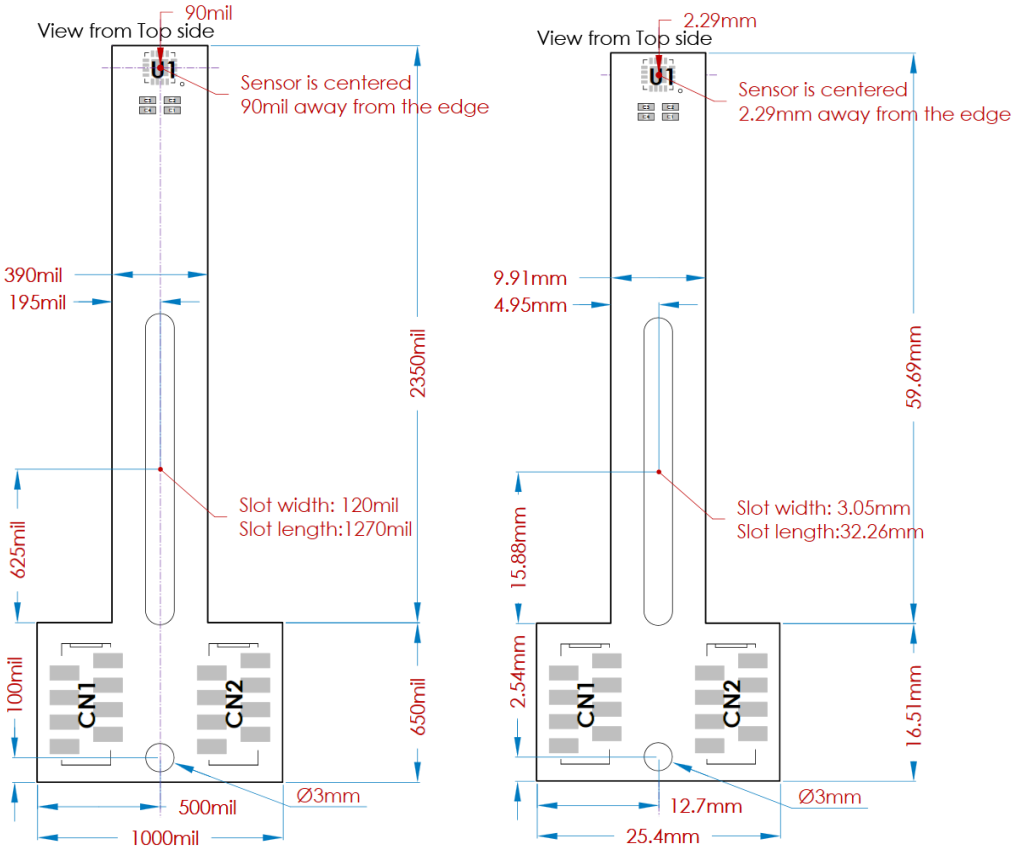


**Figure 6: Type 1 Board Mechanical Drawing (mil = 0.001” = 0.0254mm)**


MPS Proprietary Information. Patent Protected. Unauthorized Photocopy and Duplication Prohibited.
© 2023 MPS. All Rights Reserved.

## Connector Pinout

Figure 7 shows the type 1 board connector pinout.

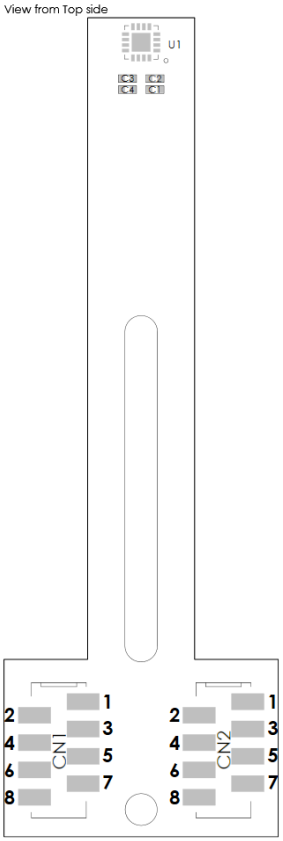


**Figure 7: Type 1 Board Connector Pinout**

Table 3 shows the type 1 board pin registers.

**Table 3: Type 1 Board Connector Pin Registers**

| Pin | Name | Description |
|---|---|---|
| CN1.1 | VDD | 3.3V supply. |
| CN1.2 | GND | Ground. |
| CN1.3 | VFLASH | Flash power supply (3.9V only powered during flashing). |
| CN1.4 | CS | Chip select (serial). |
| CN1.5 | SCLK | Clock (serial). |
| CN1.6 | MISO | Master in, slave out (serial). |
| CN1.7 | MOSI | Master out, slave in (serial). |
| CN1.8 | - | Leave disconnected. |
| CN2.1 | U (2) | U output (optional motor commutation). |
| CN2.2 | V (2) | V output (optional motor commutation). |
| CN2.3 | W (2) | W output (optional motor commutation). |
| CN2.4 | A (2) | A output (optional incremental encoder). |
| CN2.5 | B (2) | B output (optional incremental encoder). |
| CN2.6 | Z (2) | Z output (optional incremental encoder). |
| CN2.7 | TEST | Test pin. |
| CN2.8 | PWM (2) | Pulse-width modulation output (optional). |

**Note:**

2) Availability of this option depends on the MagAlpha part number. Refer directly to the part's datasheet.


MPS Proprietary Information. Patent Protected. Unauthorized Photocopy and Duplication Prohibited.
© 2023 MPS. All Rights Reserved.

## BOARD TYPE 2

Figure 8 shows an overview of the type 2 long board.

**Figure 8: Type 2 Board Overview**

### Schematic

Figure 9 shows a schematic for the type 2 board.

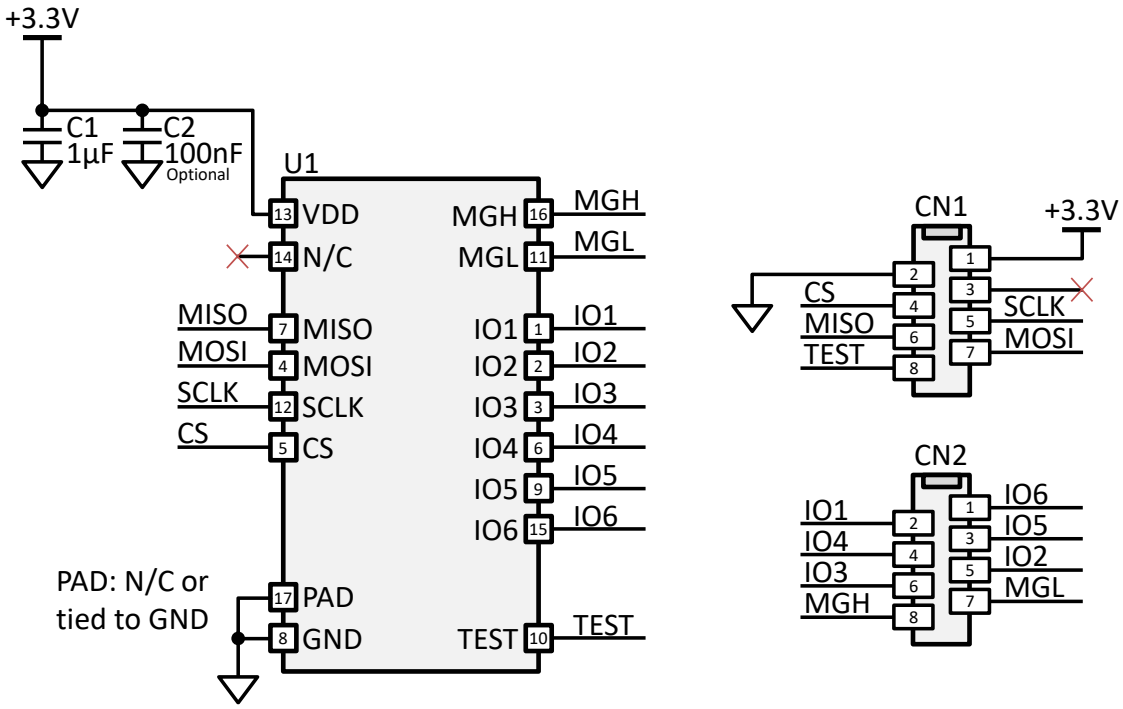


**Figure 9: Type 2 Board Schematic**


MPS Proprietary Information. Patent Protected. Unauthorized Photocopy and Duplication Prohibited.
© 2023 MPS. All Rights Reserved.

## Bill of Materials (BOM)

Table 4 shows the type 2 board BOM.

**Table 4: Type 2 Board Bill of Materials**

| Qty | Ref | Value | Description | Manufacturer | Manufacturer PN |
|---|---|---|---|---|---|
| 1 | C1 | 1µF | Ceramic capacitor, 10V, X6S, 0402 | Murata | GRM155C81A105KA12D |
| 1 | C2 (not populated) | 100nF | Ceramic capacitor, 16V, X7R, 0402 | Murata | GRM155R71C104KA88J |
| 1 | U1 | MAxxx | MagAlpha magnetic position sensor | MPS | N/A |
| 2 | CN1, CN2 (not populated) | 2.54mm | 8-position receptacle connector, 0.100” (2.54mm), surface-mount tin | Wurth or TE Connectivity | 690367280876 or 7-2178711-8 |

## Assembly View

Figure 10 shows the top-side assembly view of the type 2 board.

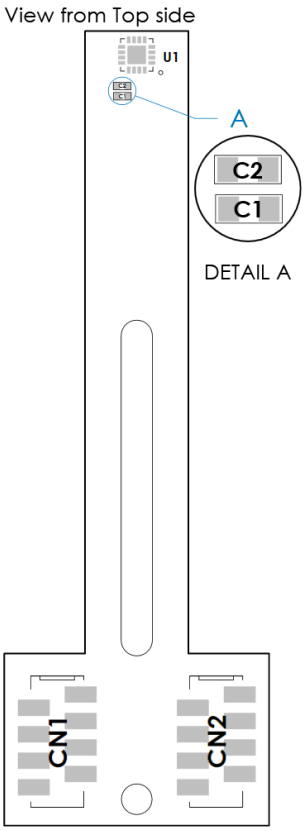


**Figure 10: Type 2 Board Assembly View**


MPS Proprietary Information. Patent Protected. Unauthorized Photocopy and Duplication Prohibited.
© 2023 MPS. All Rights Reserved.

## Mechanical Drawing

Figure 11 shows the top-side mechanical drawing of the type 2 board.

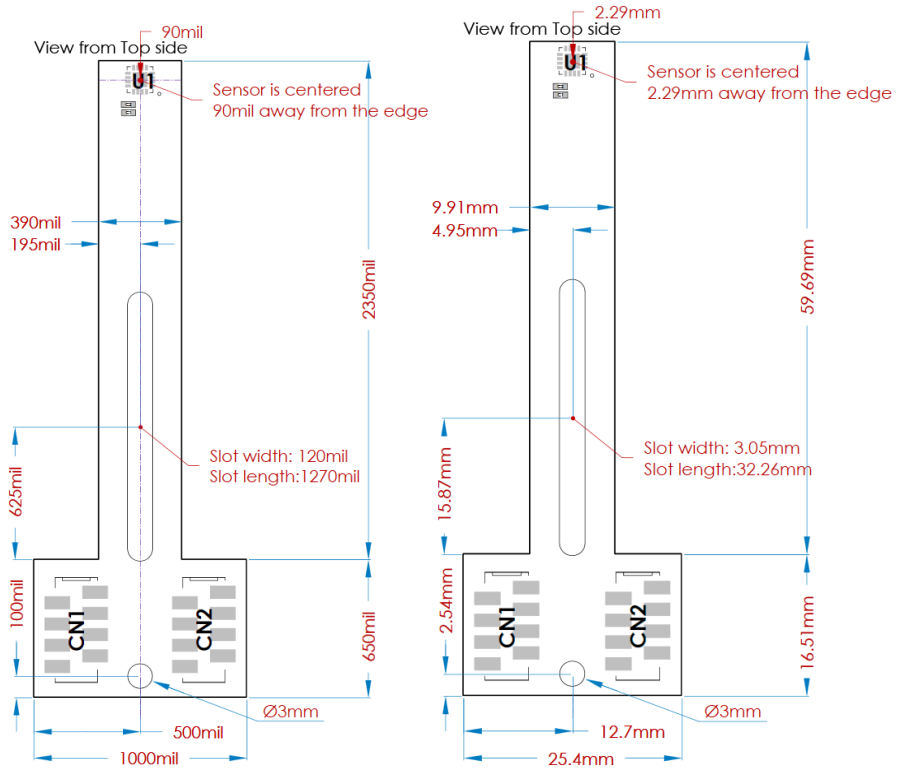


**Figure 11: Type 2 Board Mechanical Drawing (mil = 0.001” = 0.0254mm)**


MPS Proprietary Information. Patent Protected. Unauthorized Photocopy and Duplication Prohibited.
© 2023 MPS. All Rights Reserved.

## Connector Pinout

Figure 12 shows the type 2 board connector pinout.

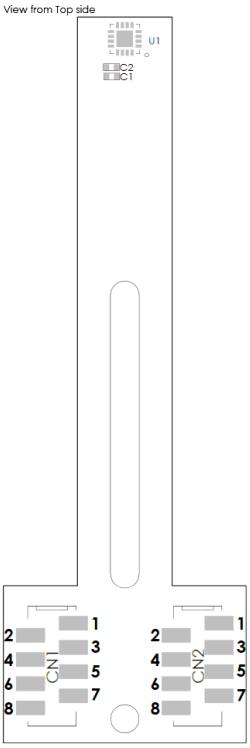


**Figure 12: Type 2 Board Connector Pinout**

Table 5 shows the type 2 board pin registers.

**Table 5: Type 2 Board Connector Pin Registers**

| Pin | Name | Description |
|---|---|---|
| CN1.1 | VDD | 3.3V supply. |
| CN1.2 | GND | Ground. |
| CN1.3 | - | - |
| CN1.4 | CS | Chip select (serial). |
| CN1.5 | SCLK | Clock (serial). |
| CN1.6 | MISO | Master in, slave out (serial). |
| CN1.7 | MOSI | Master out, slave in (serial). |
| CN1.8 | TEST | Test pin. |
| CN2.1 | IO6 (3) | Pin 15 (I/O). |
| CN2.2 | IO1 (3) | Pin 1 (I/O). |
| CN2.3 | IO5 (3) | Pin 9 (I/O). |
| CN2.4 | IO4 (3) | Pin 6 (I/O). |
| CN2.5 | IO2 (3) | Pin 2 (I/O). |
| CN2.6 | IO3 (3) | Pin 3 (I/O). |
| CN2.7 | MGL (4) | Magnetic level low (optional). |
| CN2.8 | MGH (4) | Magnetic level high (optional). |

**Notes:**

3) Refer to the MagAlpha part's datasheet to know which features are available on these pins.
4) Availability of this option depends on the MagAlpha part number. Refer directly to the part's datasheet.


MPS Proprietary Information. Patent Protected. Unauthorized Photocopy and Duplication Prohibited.
© 2023 MPS. All Rights Reserved.

## BOARD TYPE 3

Figure 13 shows an overview of the type 3 board.

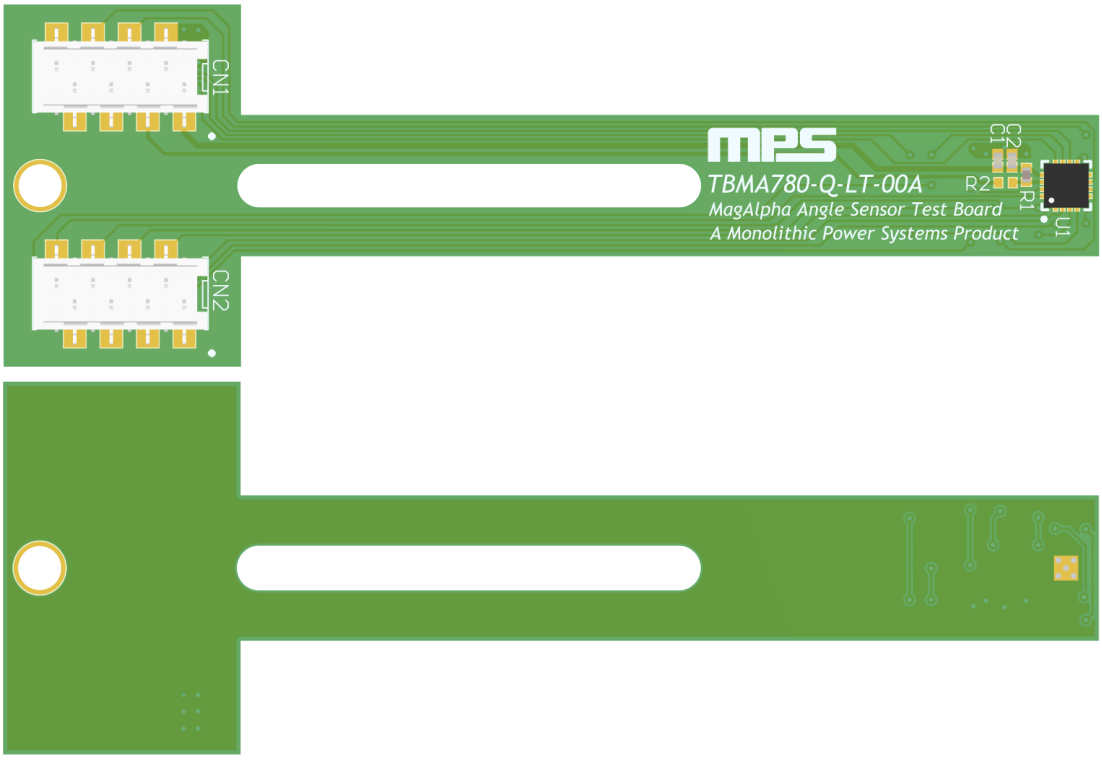


**Figure 13: Type 3 Board Overview**

### Schematic

Figure 14 shows a schematic for the type 3 board.

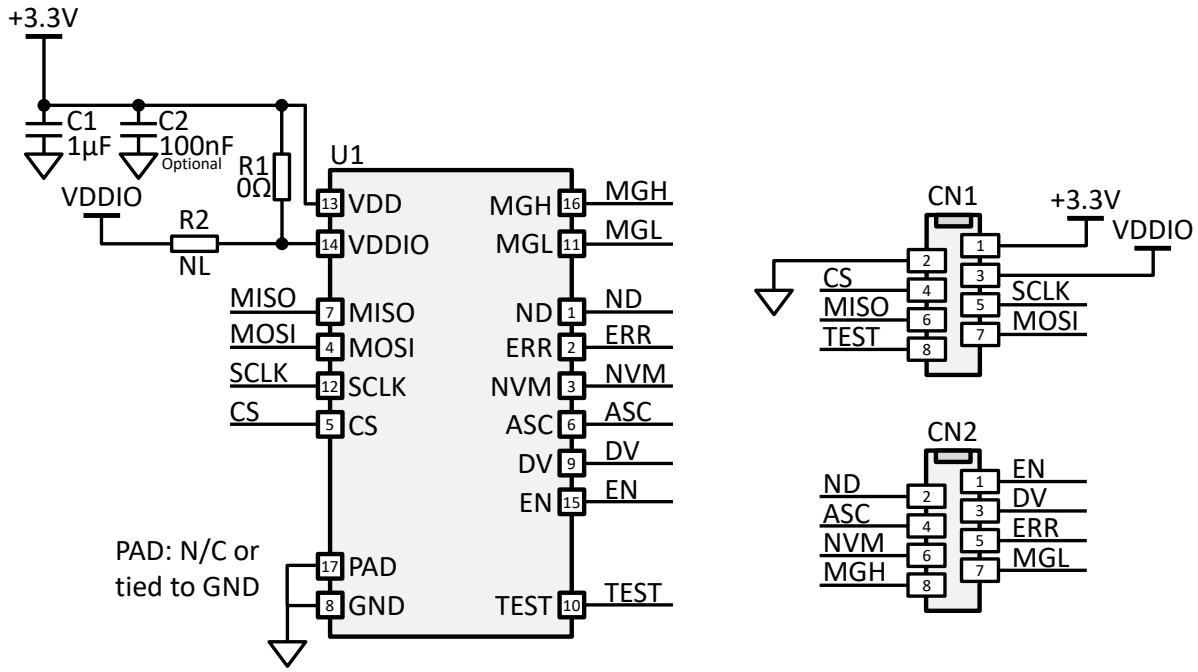


**Figure 14: Type 3 Board Schematic**


MPS Proprietary Information. Patent Protected. Unauthorized Photocopy and Duplication Prohibited.
© 2023 MPS. All Rights Reserved.

## Bill of Materials (BOM)

Table 6 shows the type 3 board BOM.

**Table 6: Type 3 Board Bill of Materials**

| Qty | Ref | Value | Description | Manufacturer | Manufacturer PN |
|---|---|---|---|---|---|
| 1 | C1 | 1µF | Ceramic capacitor, 10V, X6S, 0402 | Murata | GRM155C81A105KA12D |
| 1 | C2 (not populated) | 100nF | Ceramic capacitor, 16V, X7R, 0402 | Murata | GRM155R71C104KA88J |
| 1 | R1 (populated), R2 (not populated) | 0Ω | 0Ω resistor, 0402 | Panasonic | ERJ-2GE0R00X |
| 1 | U1 | MA780 | MagAlpha magnetic position sensor | MPS | MA780GQ |
| 2 | CN1, CN2 (not populated) | 2.54mm | 8-position receptacle connector, 0.100” (2.54mm), surface-mount tin | Wurth or TE Connectivity | 690367280876 or 7-2178711-8 |

## Assembly View

Figure 15 shows the top-side assembly view of the type 3 board.

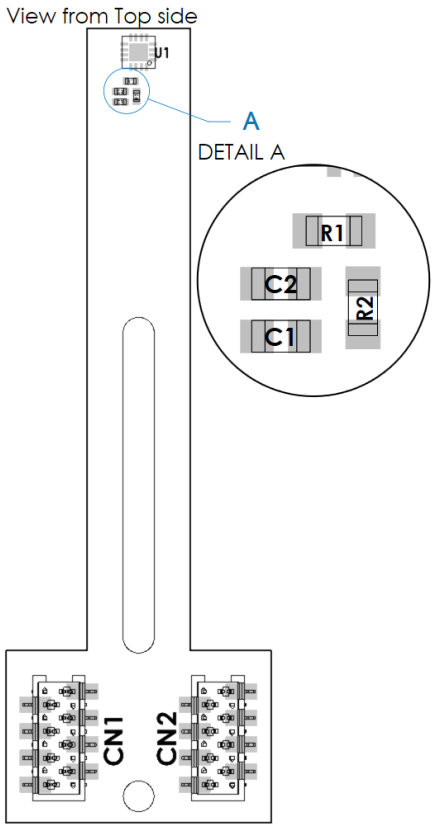


**Figure 15: Type 3 Board Assembly View**


MPS Proprietary Information. Patent Protected. Unauthorized Photocopy and Duplication Prohibited.
© 2023 MPS. All Rights Reserved.

## Mechanical Drawing

Figure 16 shows the top-side mechanical drawing of the type 3 board.

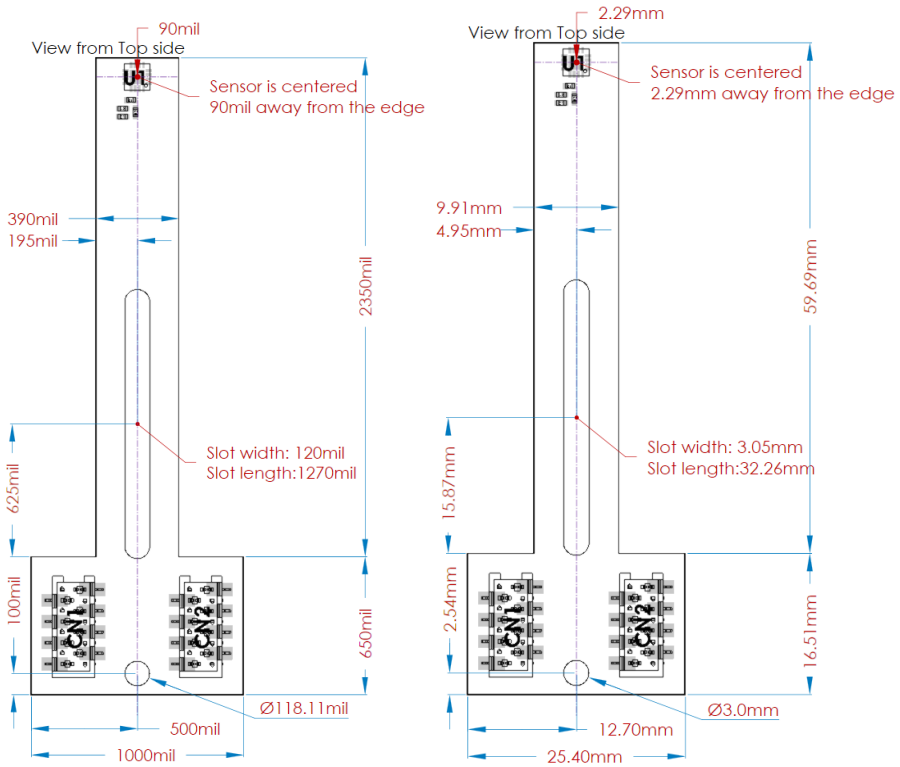


**Figure 16: Type 3 Board Mechanical Drawing (mil = 0.001” = 0.0254mm)**


MPS Proprietary Information. Patent Protected. Unauthorized Photocopy and Duplication Prohibited.
© 2023 MPS. All Rights Reserved.

## Connector Pinout

Figure 17 shows the type 3 board connector pinout.

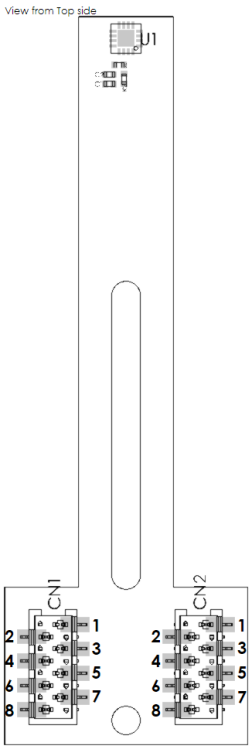


**Figure 17: Type 3 Connector Pinout**

Table 7 shows the type 3 board pin registers.

**Table 7: Type 3 Board Connector Pin Registers**

| Pin | Name | Description |
|---|---|---|
| CN1.1 | VDD | 3.3V supply. |
| CN1.2 | GND | Ground. |
| CN1.3 | VDDIO | 1.8V to 3.3V supply for I/Os. |
| CN1.4 | CS | Chip select (serial). |
| CN1.5 | SCLK | Clock (serial). |
| CN1.6 | MISO | Master in, slave out (serial). |
| CN1.7 | MOSI | Master out, slave in (serial). |
| CN1.8 | TEST | Test pin. |
| CN2.1 | EN | Enable (input). Switches the sensor to active mode. |
| CN2.2 | ND | New data (output). |
| CN2.3 | DV | Data valid (output). |
| CN2.4 | ASC | Auto-power cycling mode (input). |
| CN2.5 | ERR | Error flag (output). |
| CN2.6 | NVM | Non-volatile memory (output). |
| CN2.7 | MGL (5) | Magnetic level low (optional). |
| CN2.8 | MGH (5) | Magnetic level high (optional). |

**Note:**

5) Availability of this option depends on the MagAlpha part number. Refer directly to the part's datasheet.


MPS Proprietary Information. Patent Protected. Unauthorized Photocopy and Duplication Prohibited.
© 2023 MPS. All Rights Reserved.

## BOARD TYPE 4

Figure 18 shows an overview of the type 4 board.

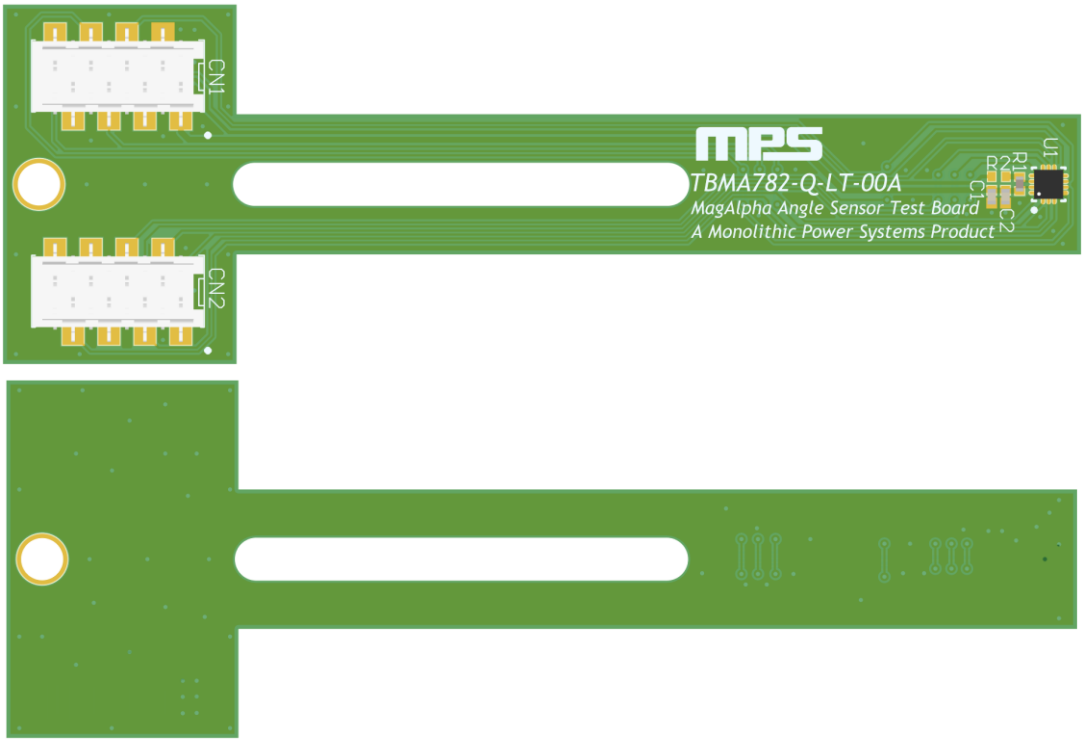


**Figure 18: Type 4 Board Overview**

### Schematic

Figure 19 shows a schematic for the type 4 board.

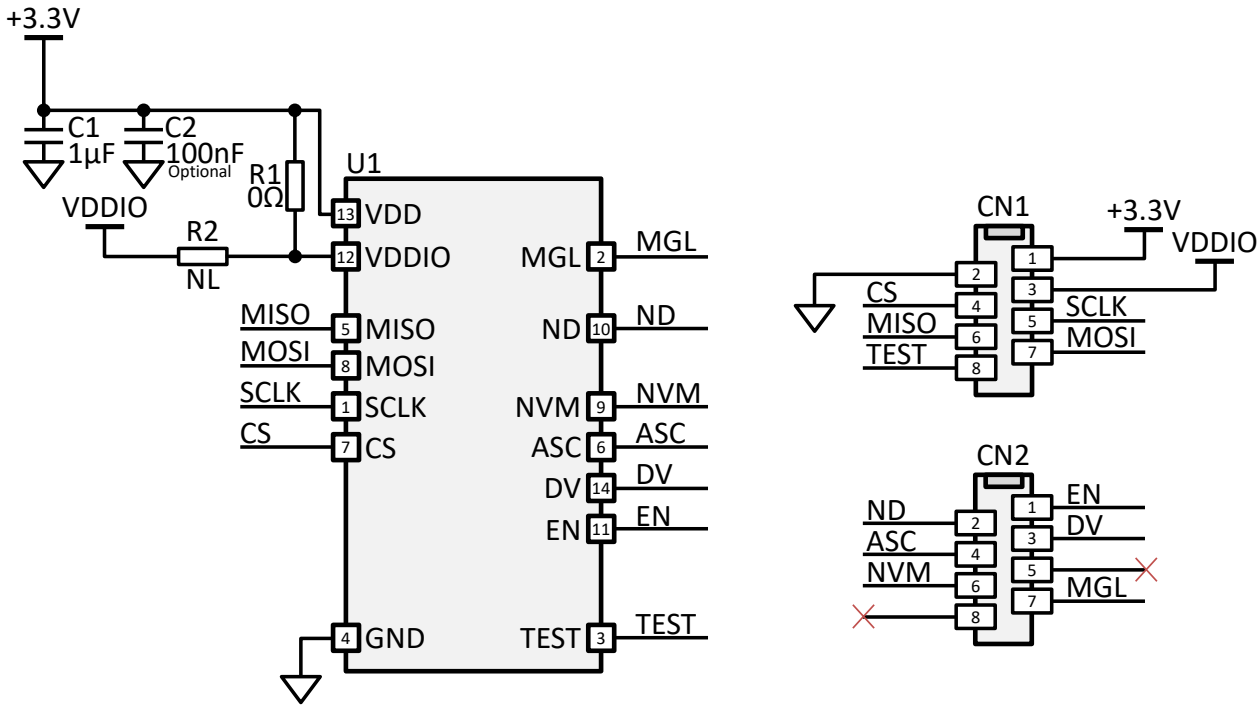


**Figure 19: Type 4 Board Schematic**


MPS Proprietary Information. Patent Protected. Unauthorized Photocopy and Duplication Prohibited.
© 2023 MPS. All Rights Reserved.

## Bill of Materials (BOM)

Table 8 shows the type 4 board BOM.

**Table 8: Type 4 Board Bill of Materials**

| Qty | Refr | Value | Description | Manufacturer | Manufacturer PN |
|---|---|---|---|---|---|
| 1 | C1 | 1µF | Ceramic capacitor, 10V, X6S, 0402 | Murata | GRM155C81A105KA12D |
| 1 | C2 (not populated) | 100nF | Ceramic capacitor, 16V, X7R, 0402 | Murata | GRM155R71C104KA88J |
| 1 | R1 (populated), R2 (not populated) | 0Ω | 0Ω resistor, 0402 | Panasonic | ERJ-2GE0R00X |
| 1 | U1 | MA782 | MagAlpha magnetic position sensor | MPS | MA782GGU |
| 2 | CN1, CN2 (not populated) | 2.54mm | 8-position receptacle connector, 0.100” (2.54mm), surface-mount tin | Wurth or TE Connectivity | 690367280876 or 7-2178711-8 |

## Assembly View

Figure 20 shows the top-side assembly view of the type 4 board.

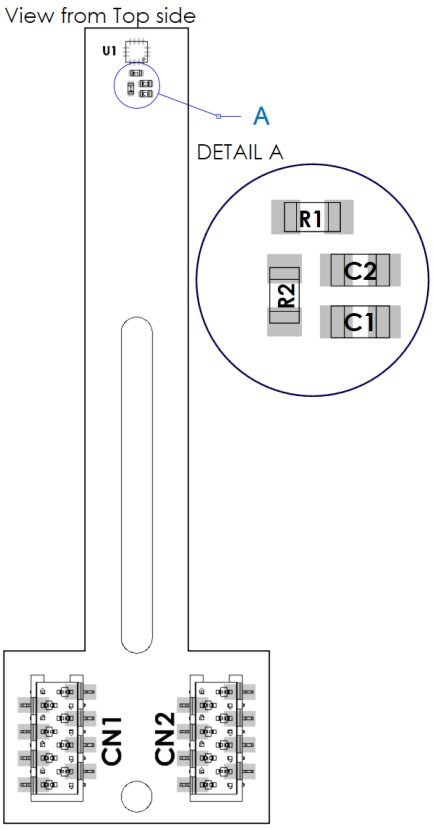


**Figure 20: Type 4 Board Assembly View**


MPS Proprietary Information. Patent Protected. Unauthorized Photocopy and Duplication Prohibited.
© 2023 MPS. All Rights Reserved.

## Mechanical Drawing

**Error! Reference source not found.**Figure 21 shows the top-side mechanical drawing of the type 4 board.

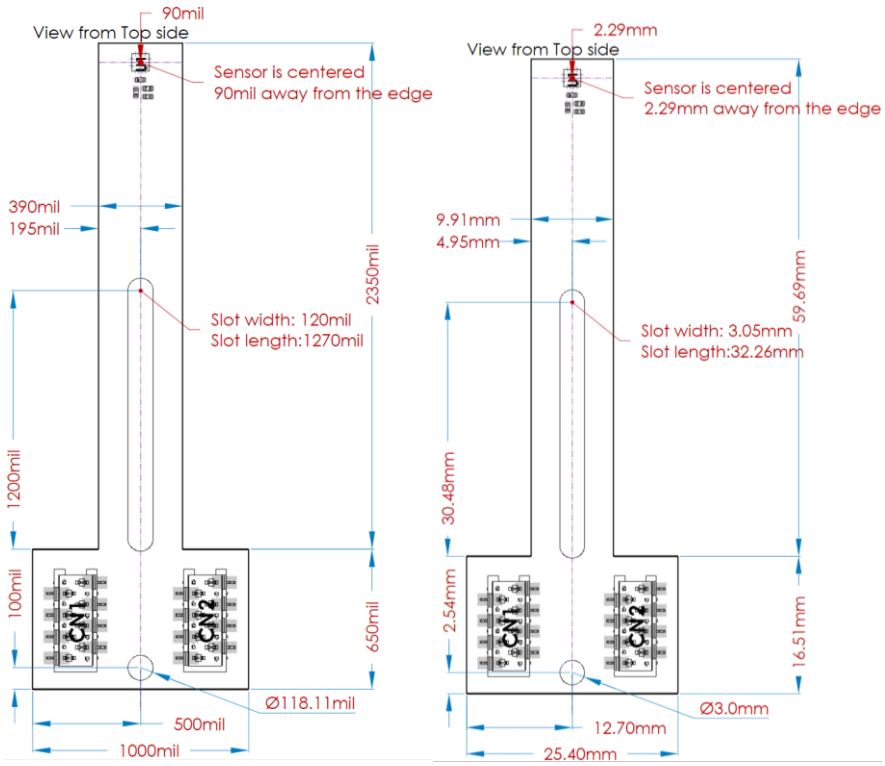


**Figure 21: Type 4 Board Mechanical Drawing (mil = 0.001” = 0.0254mm)**


MPS Proprietary Information. Patent Protected. Unauthorized Photocopy and Duplication Prohibited.
© 2023 MPS. All Rights Reserved.

## Connector Pinout

Figure 22 shows the type 4 board connector pinout.

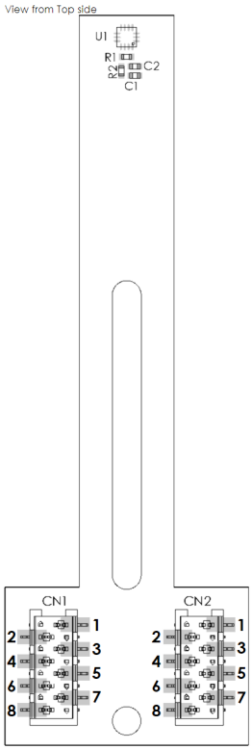


**Figure 22: Type 4 Connector Pinout**

Table 9 shows the type 4 board pin registers.

**Table 9: Type 4 Board Connector Pin Registers**

| Pin | Name | Description |
|---|---|---|
| CN1.1 | VDD | 3.3V supply. |
| CN1.2 | GND | Ground. |
| CN1.3 | VDDIO | 1.8V to 3.3V supply for I/Os. |
| CN1.4 | CS | Chip select (serial). |
| CN1.5 | SCLK | Clock (serial). |
| CN1.6 | MISO | Master in, slave out (serial). |
| CN1.7 | MOSI | Master out, slave in (serial). |
| CN1.8 | TEST | Test pin. |
| CN2.1 | EN | Enable (input). Switches the sensor to active mode. |
| CN2.2 | ND | New data (output). |
| CN2.3 | DV | Data valid (output). |
| CN2.4 | ASC | Auto-power cycling mode (input). |
| CN2.5 | - | - |
| CN2.6 | NVM | Non-volatile memory (output). |
| CN2.7 | MGL [6] | Magnetic level low (optional). |
| CN2.8 | - | - |

**Note:**

6) Availability of this option depends on the MagAlpha part number. Refer directly to the related part's datasheet.


MPS Proprietary Information. Patent Protected. Unauthorized Photocopy and Duplication Prohibited.
© 2023 MPS. All Rights Reserved.

## BOARD TYPE 5

Figure 23 shows an overview of the type 5 board.

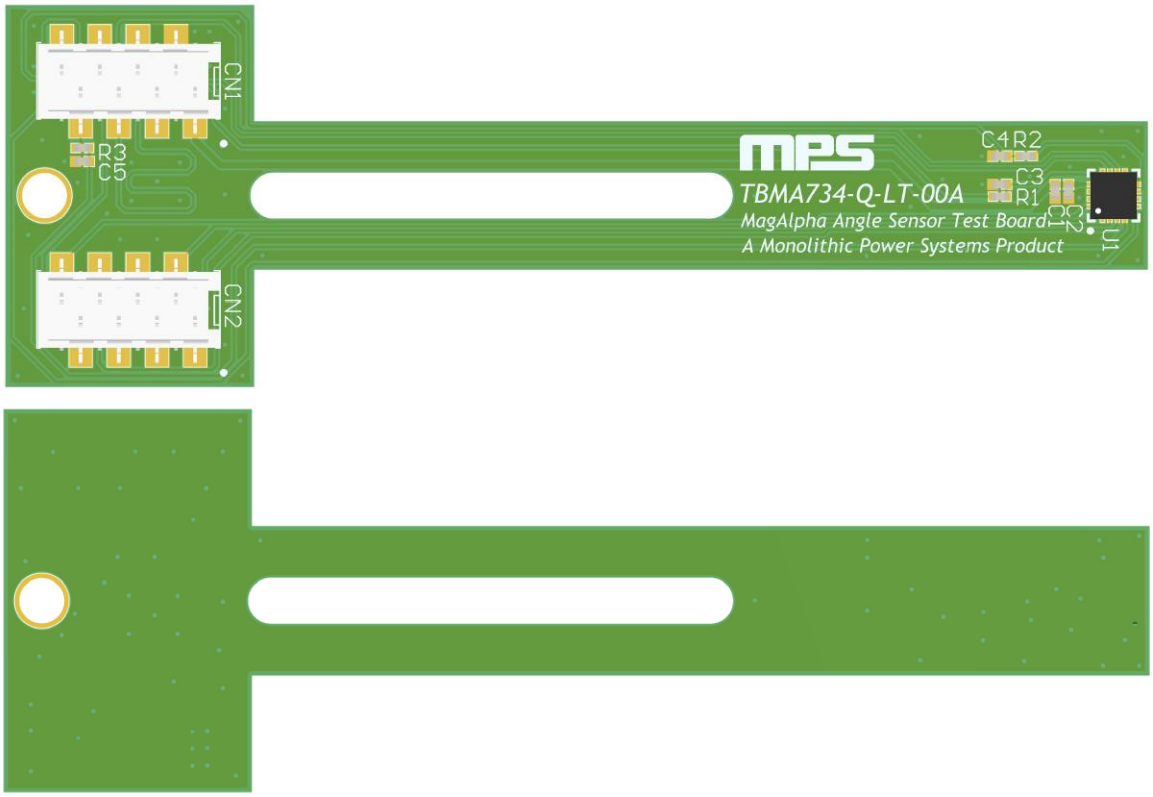


**Figure 23: Type 5 Board Overview**

### Schematic

Figure 24 shows a schematic for the type 5 board.

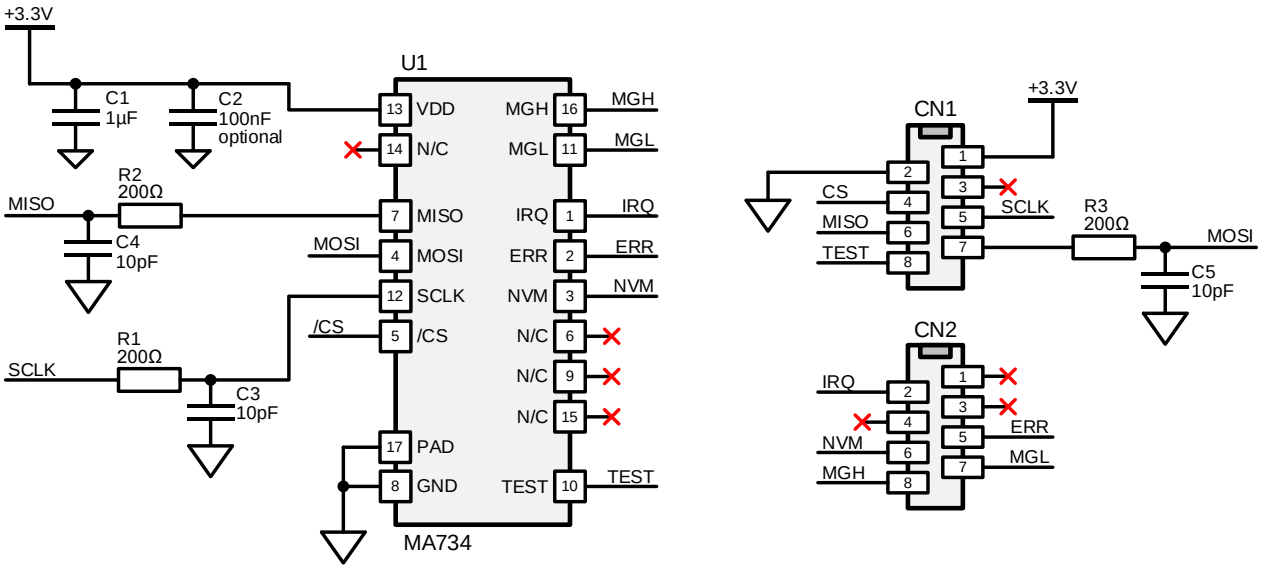


**Figure 24: Type 5 Board Schematic**


MPS Proprietary Information. Patent Protected. Unauthorized Photocopy and Duplication Prohibited.
© 2023 MPS. All Rights Reserved.

## Bill of Materials (BOM)

Table 10 shows the type 5 board BOM.

**Table 10: Type 5 Board Bill of Materials**

| Qty | Ref | Value | Description | Manufacturer | Manufacturer PN |
|---|---|---|---|---|---|
| 1 | C1 | 1µF | Ceramic capacitor, 10V, X6S, 0402 | Murata | GRM155C81A105KA12D |
| 1 | C2 (optional) | 100nF | Ceramic capacitor, 16V, X7R, 0402 | Murata | GRM155R71C104KA88J |
| 3 | R1, R2, R3 | 200Ω | 200Ω resistor, 0402 | Yageo | RC0402FR-07200RL |
| 3 | C3, C4, C5 | 10pF | Ceramic capacitor, 50V, C0G, 0402 | Yageo | CC0402JRNPO9BN100 |
| 1 | U1 | MA734 | MagAlpha magnetic position sensor | MPS | MA734 |
| 2 | CN1, CN2 | 2.54mm | 8-position receptacle connector, 0.100” (2.54mm), surface-mount tin | Wurth or TE Connectivity | 690367280876 or 7-2178711-8 |

## Assembly View

Figure 25 shows the top-side assembly view of the type 5 board.

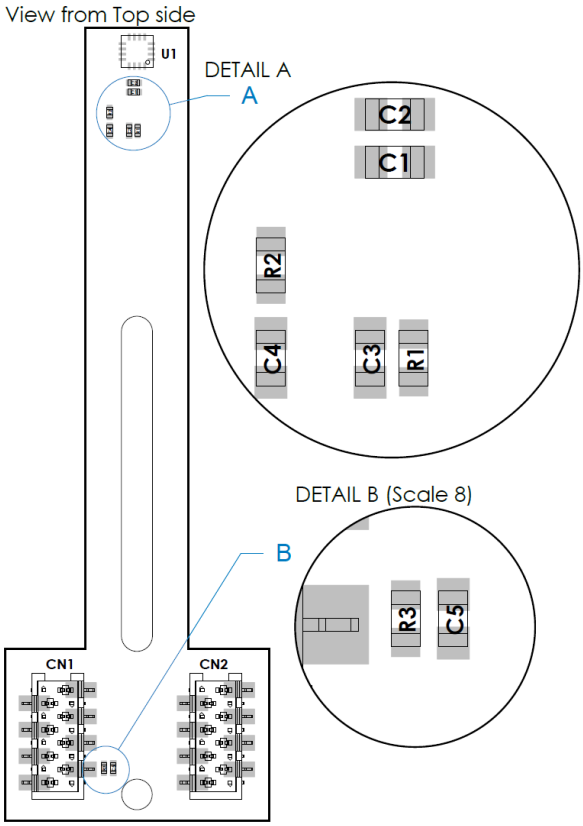


**Figure 25: Type 5 Board Assembly View**


MPS Proprietary Information. Patent Protected. Unauthorized Photocopy and Duplication Prohibited.
© 2023 MPS. All Rights Reserved.

## Mechanical Drawing

Figure 26 shows the top-side mechanical drawing of the type 5 board.

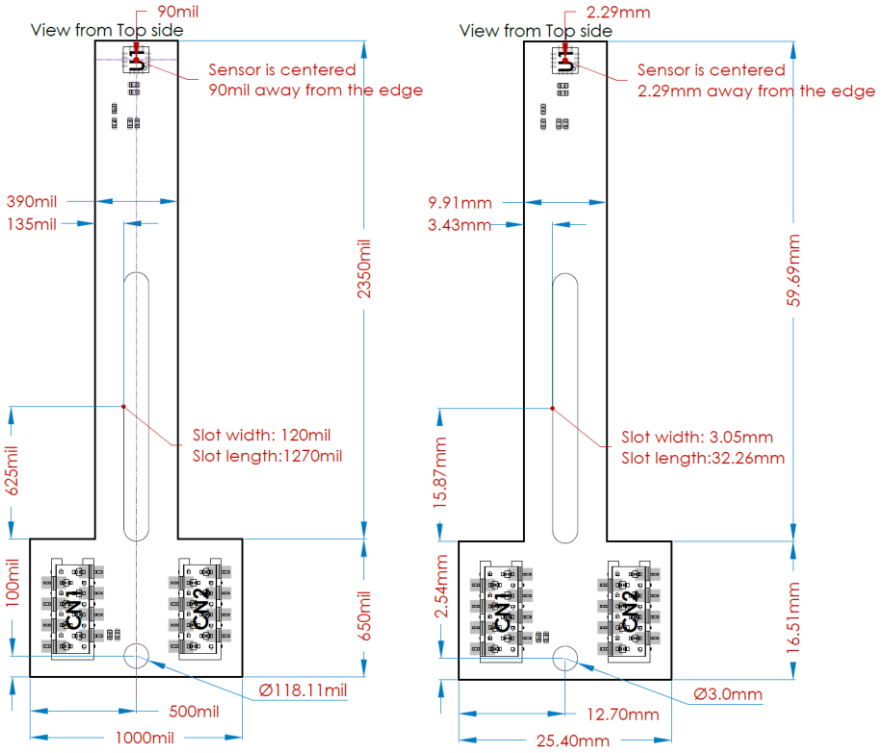


**Figure 26: Type 5 Board Mechanical Drawing (mil = 0.001” = 0.0254mm)**


MPS Proprietary Information. Patent Protected. Unauthorized Photocopy and Duplication Prohibited.
© 2023 MPS. All Rights Reserved.

## Connector Pinout

Figure 27 shows the type 5 board connector pinout.

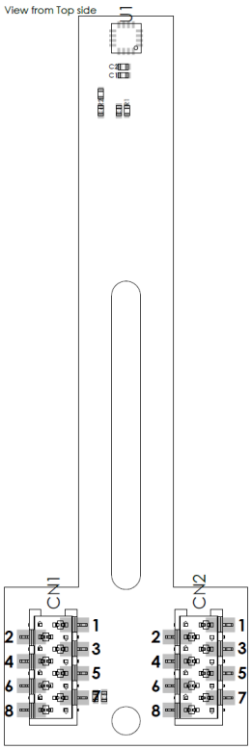


**Figure 27: Type 5 Connector Pinout**

Table 11 shows the type 5 board pin registers.

**Table 11: Type 5 Board Connector Pin Registers**

| Pin | Name | Description |
|---|---|---|
| CN1.1 | VDD | 3.3V supply. |
| CN1.2 | GND | Ground. |
| CN1.3 | NC | Not connected. |
| CN1.4 | CS | Chip select (serial). |
| CN1.5 | SCLK | Clock (serial). |
| CN1.6 | MISO | Master in, slave out (serial). |
| CN1.7 | MOSI | Master out, slave in (serial). |
| CN1.8 | TEST | Test pin. |
| CN2.1 | NC | Not connected. |
| CN2.2 | IRQ | Interrupt on angle change (output). |
| CN2.3 | NC | Not connected. |
| CN2.4 | NC | Not connected. |
| CN2.5 | ERR | Error flag (output). |
| CN2.6 | NVM | Non-volatile memory (output). |
| CN2.7 | MGL | Magnetic level low (optional). |
| CN2.8 | MGH | Magnetic level high (optional). |


MPS Proprietary Information. Patent Protected. Unauthorized Photocopy and Duplication Prohibited.
© 2023 MPS. All Rights Reserved.

## BOARD TYPE 6

Figure 28 shows an overview of the type 6 board.

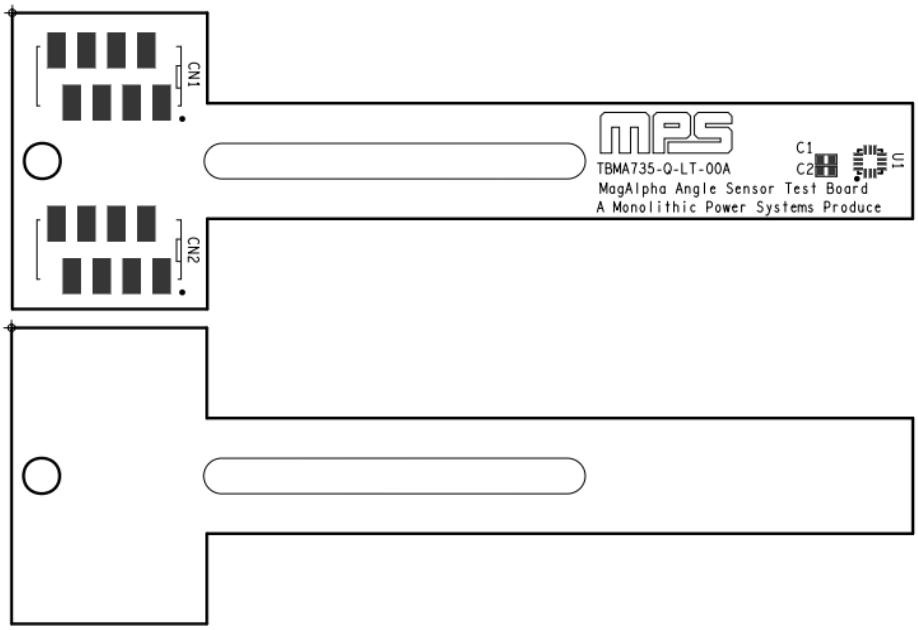


**Figure 28: Type 6 Board Overview**

### Schematic

Figure 29 shows a schematic for the type 6 board.

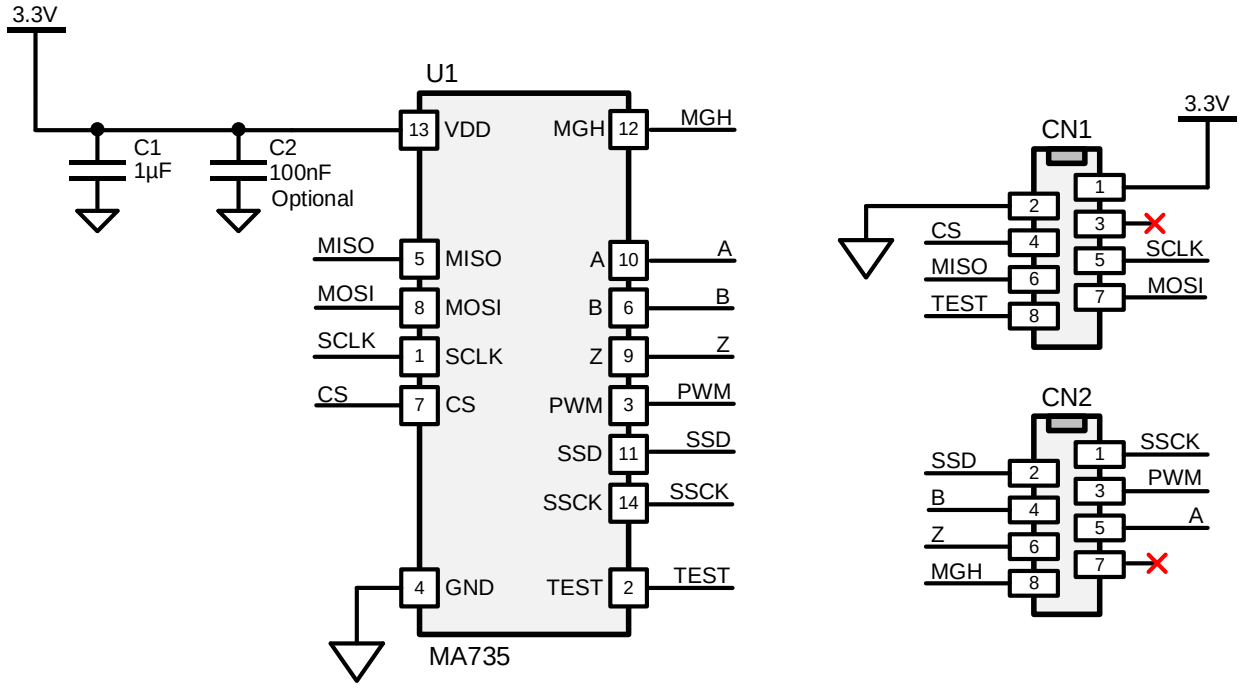


**Figure 29: Type 6 Board Schematic**


MPS Proprietary Information. Patent Protected. Unauthorized Photocopy and Duplication Prohibited.
© 2023 MPS. All Rights Reserved.

## Bill of Materials (BOM)

Table 12 shows the type 6 board BOM.

**Table 12: Type 6 Board Bill of Materials**

| Qty | Ref | Value | Description | Manufacturer | Manufacturer PN |
|---|---|---|---|---|---|
| 1 | C1 | 1µF | Ceramic capacitor, 10V, X6S, 0402 | Murata | GRM155C81A105KA12D |
| 1 | C2 (optional) | 100nF | Ceramic capacitor, 16V, X7R, 0402 | Murata | GRM155R71C104KA88J |
| 1 | U1 | MA735 | MagAlpha magnetic position sensor | MPS | MA735 |
| 2 | CN1, CN2 | 2.54mm | 8-position receptacle connector, 0.100” (2.54mm), surface-mount tin | Wurth or TE Connectivity | 690367280876 or 7-2178711-8 |

## Mechanical Drawing

Figure 30 shows the top-side mechanical drawing of the type 6 board.

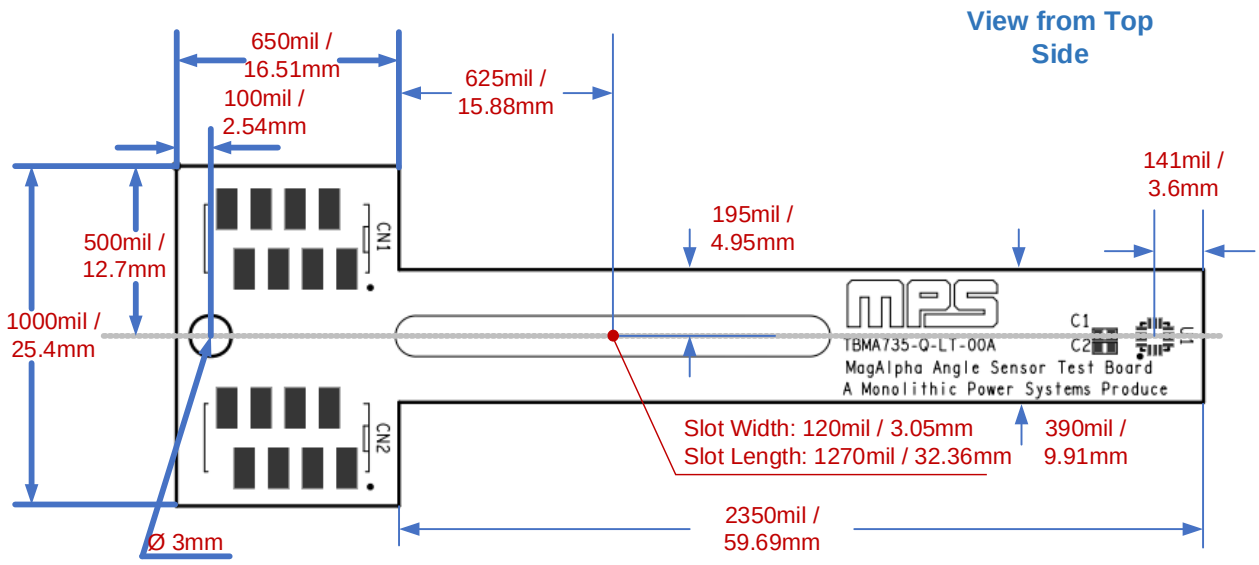


**Figure 30: Type 6 Board Mechanical Drawing (mil = 0.001” = 0.0254mm)**

## Connector Pinout

Figure 31 shows the type 6 board connector pinout.

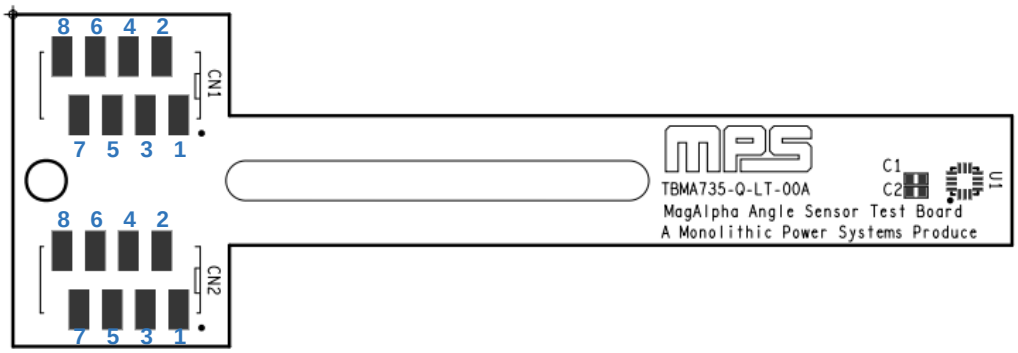


**Figure 31: Type 6 Board Connector Pinout**


MPS Proprietary Information. Patent Protected. Unauthorized Photocopy and Duplication Prohibited.
© 2023 MPS. All Rights Reserved.

Table 13 shows the type 6 board pin registers.

**Table 13: Type 6 Board Connector Pin Registers**

| Pin | Name | Description |
|---|---|---|
| CN1.1 | VDD | 3.3V supply. |
| CN1.2 | GND | Ground. |
| CN1.3 | NC | Not connected. |
| CN1.4 | CS | Chip select (serial). |
| CN1.5 | SCLK | Clock (serial). |
| CN1.6 | MISO | Master in, slave out (serial). |
| CN1.7 | MOSI | Master out, slave in (serial). |
| CN1.8 | TEST | Test pin. |
| CN2.1 | SSCK | Clock (SSI). |
| CN2.2 | SSD | Data out (SSI). |
| CN2.3 | PWM | PWM output. |
| CN2.4 | B | Incremental output. |
| CN2.5 | A | Incremental output. |
| CN2.6 | Z | Incremental output. |
| CN2.7 | NC | Not connected. |
| CN2.8 | MGH | Magnetic level high (output). |


MPS Proprietary Information. Patent Protected. Unauthorized Photocopy and Duplication Prohibited.
© 2023 MPS. All Rights Reserved.

## BOARD TYPE 7

Figure 32 shows an overview of the type 7 board.

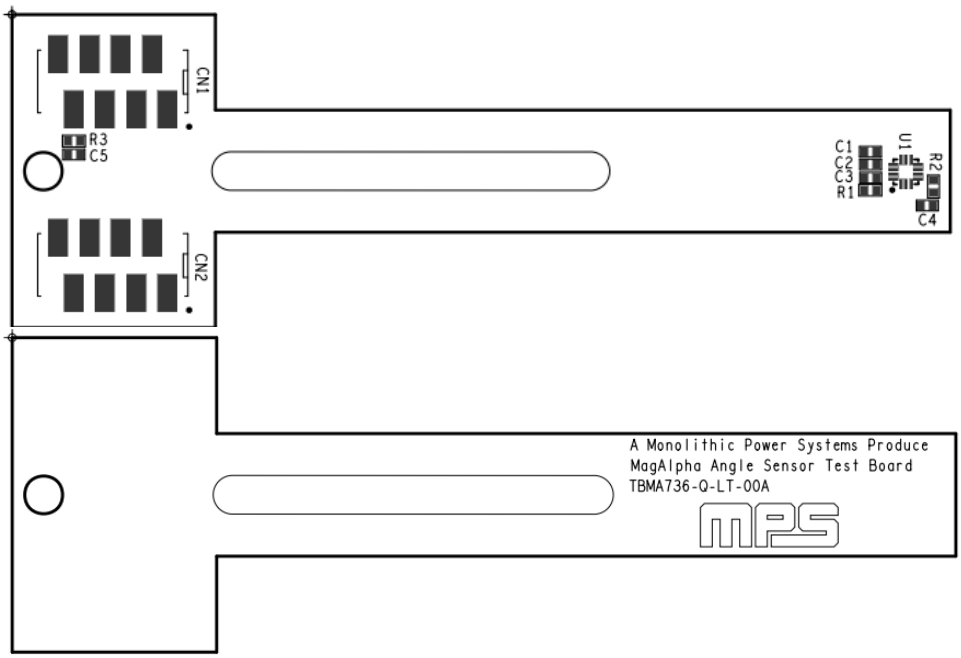


**Figure 32: Type 7 Board Overview**

### Schematic

Figure 33 shows a schematic for the type 7 board.

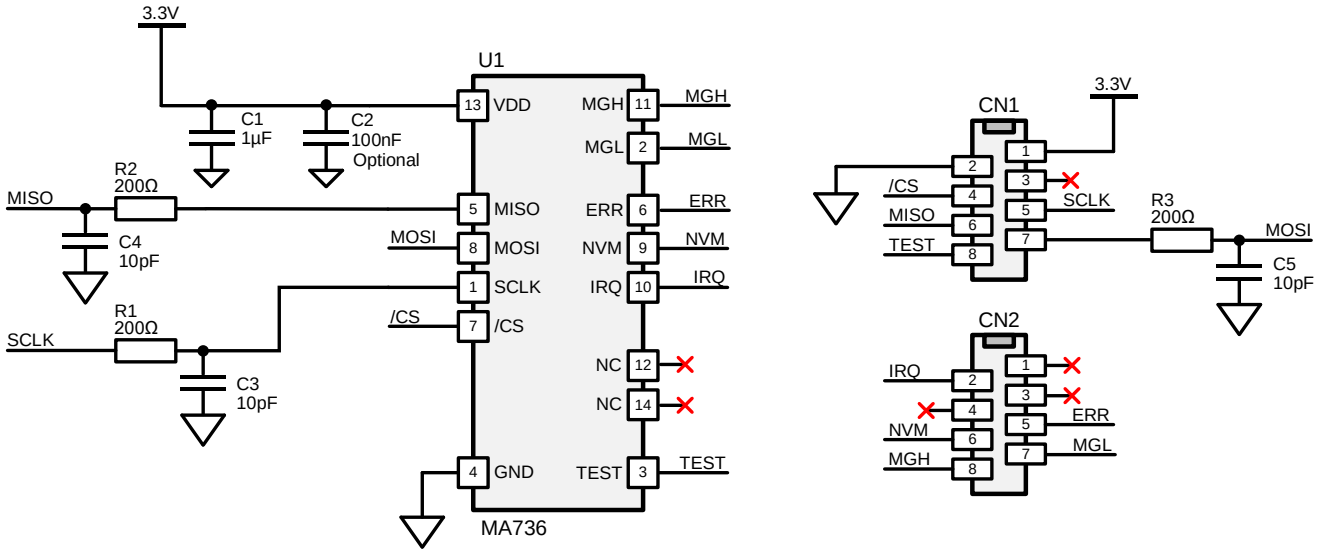


**Figure 33: Type 7 Board Schematic**


MPS Proprietary Information. Patent Protected. Unauthorized Photocopy and Duplication Prohibited.
© 2023 MPS. All Rights Reserved.

## Bill of Materials (BOM)

Table 14 shows the type 7 board BOM.

**Table 14: Type 7 Board Bill of Materials**

| Qty | Ref | Value | Description | Manufacturer | Manufacturer PN |
|---|---|---|---|---|---|
| 1 | C1 | 1µF | Ceramic capacitor, 10V, X6S, 0402 | Murata | GRM155C81A105KA12D |
| 1 | C2 (optional) | 100nF | Ceramic capacitor, 16V, X7R, 0402 | Murata | GRM155R71C104KA88J |
| 3 | R1, R2, R3 | 200Ω | 200Ω resistor, 0402 | Yageo | RC0402FR-07200RL |
| 3 | C3, C4, C5 | 10pF | Ceramic capacitor, 50V, C0G, 0402 | Yageo | CC0402JRNPO9BN100 |
| 1 | U1 | MA736 | MagAlpha magnetic position sensor | MPS | MA736 |
| 2 | CN1, CN2 | 2.54mm | 8-position receptacle connector, 0.100” (2.54mm), surface-mount tin | Wurth or TE Connectivity | 690367280876 or 7-2178711-8 |

## Mechanical Drawing

Figure 34 shows the top-side mechanical drawing of the Type 7 board.

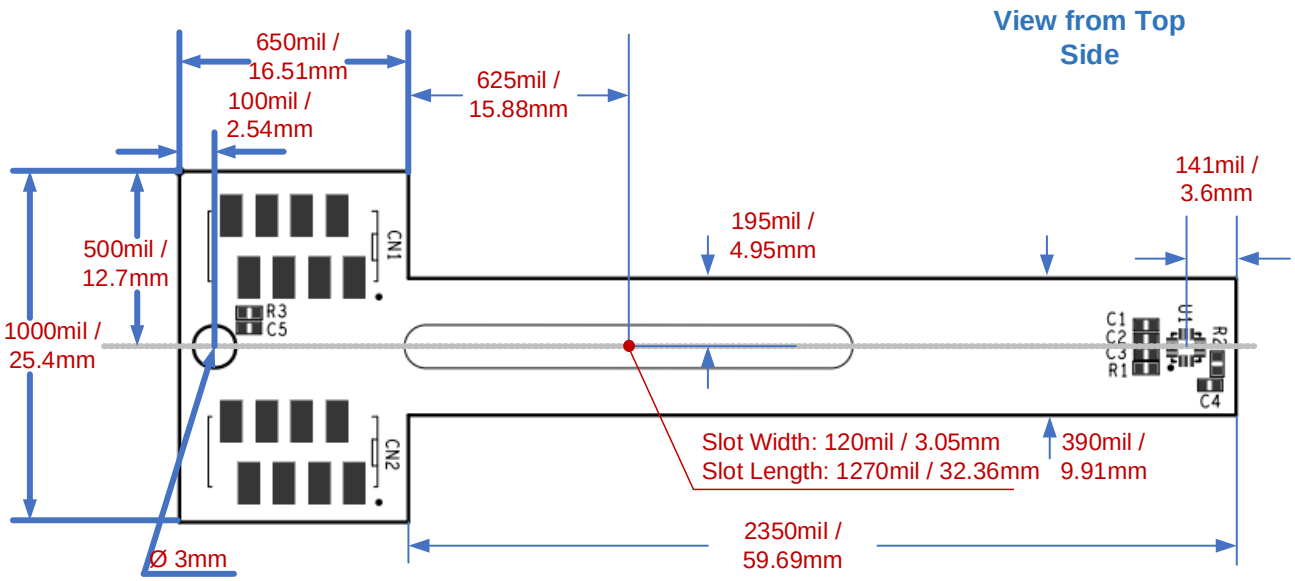


**Figure 34: Type 7 Board Mechanical Drawing (mil = 0.001” = 0.0254mm)**


MPS Proprietary Information. Patent Protected. Unauthorized Photocopy and Duplication Prohibited.
© 2023 MPS. All Rights Reserved.

### Connector Pinout

Figure 35 shows the type 7 board connector pinout.

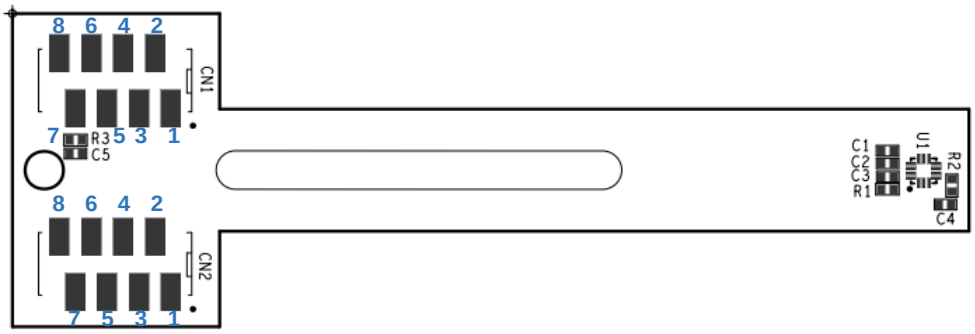


**Figure 35: Type 7 Board Connector Pinout**

Table 15 shows the type 7 board pin registers.

**Table 15: Type 7 Board Connector Pin Registers**

| Pin | Name | Description |
|---|---|---|
| CN1.1 | VDD | 3.3V supply. |
| CN1.2 | GND | Ground. |
| CN1.3 | NC | Not connected. |
| CN1.4 | /CS | Chip select (serial). |
| CN1.5 | SCLK | Clock (serial). |
| CN1.6 | MISO | Master in, slave out (serial). |
| CN1.7 | MOSI | Master out, slave in (serial). |
| CN1.8 | TEST | Test pin. |
| CN2.1 | NC | Not connected. |
| CN2.2 | IRQ | Interrupt on angle change (output). |
| CN2.3 | NC | Not connected. |
| CN2.4 | NC | Not connected. |
| CN2.5 | ERR | Error flag (output). |
| CN2.6 | NVM | Non-volatile memory (output). |
| CN2.7 | MGL | Magnetic level low (output). |
| CN2.8 | MGH | Magnetic level high (output). |


MPS Proprietary Information. Patent Protected. Unauthorized Photocopy and Duplication Prohibited.
© 2023 MPS. All Rights Reserved.

## MAGNET SUPPLIERS

A selection of magnets are available with MPS's MAG10 magnet product family. This family offers three different magnet geometries: cylinder, ring, and half-cylinder. Figure 36 shows the available magnet geometries. The MPS MAG10 magnet product family can be purchased directly from MPS.

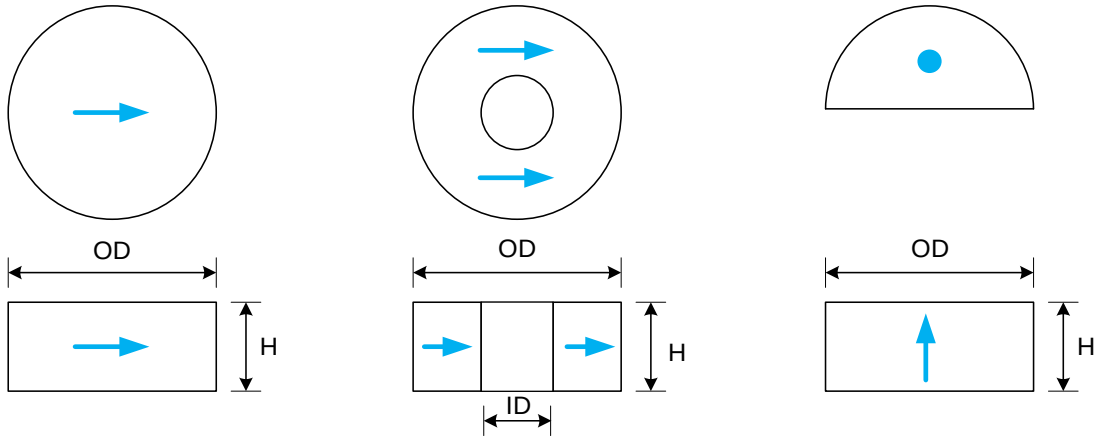


**Figure 36: MPS's MAG10 Magnet Geometries**

Visit our website learn more about our magnet portfolio:

https://www.monolithicpower.com/en/products/sensors/position-sensors/position-sensor-magnets.html

If the magnet required for your application is not listed on our website, consider the following non-exhaustive list of possible magnet suppliers (see Table 16). The magnetization direction must be selected given that most sold magnets are often axially magnetized, which is not a magnetization direction typically required in magnetic angle-sensing applications. Angle-sensing applications typically use diametrically magnetized magnets.

**Table 16: Magnet Suppliers**

| Company | Website | Address | Comments |
|---|---|---|---|
| Bomatec AG | www.bomatec.com | Hofstrasse 1,<br>8181 Höri,<br>Switzerland | An MPS partner for many projects. |
| Maurer Magnetics AG | www.maurermagnetic.ch | Industriestrasse 8<br>8627 Grüningen,<br>Switzerland | Maurer offers a selection of diametrically magnetized magnets in stock. |
| Arnold Technologies AG | www.arnoldmagnetics.com | Hübelacherstrasse 15<br>5242 Birr-Lupfig,<br>Switzerland | |
| Dexter Magnetic Technologies | www.dextermag.com | 1050 Morse Avenue,<br>Elk Grove Village,<br>IL 60007-5110<br>USA | |
| JPMF | www.jpmf.com.cn | 8 LongWan Road,<br>Jiangmen City,<br>GuangDong Province,<br>China | Magnet overmolding. |
| IMA | www.imamagnets.com | Avda. Cataluña 5,<br>08291 Ripollet, Barcelona,<br>Spain | Magnet overmolding, magnetic tapes. |


MPS Proprietary Information. Patent Protected. Unauthorized Photocopy and Duplication Prohibited.
© 2023 MPS. All Rights Reserved.

## REVISION HISTORY

| Revision # | Revision Date | Description | Pages Updated |
|---|---|---|---|
| 1.0 | 9/17/2020 | Added TBMAQ family into list of board types; expanded Magnet Suppliers section and modified list of magnet suppliers; grammar and formatting updates | All |
| 1.1 | 9/22/2021 | Added Type 5 Board (MA734) | 4, 25–29 |
| 1.2 | 12/7/2023 | • Removed all content related to round type boards<br>• Added Type 6 board (MA735) and Type 7 board (MA736)<br>• Significant rewrite | All |

**Notice:** The information in this document is subject to change without notice. Please contact MPS for current specifications. Users should warrant and guarantee that third-party Intellectual Property rights are not infringed upon when integrating MPS products into any application. MPS will not assume any legal responsibility for any said applications.


MPS Proprietary Information. Patent Protected. Unauthorized Photocopy and Duplication Prohibited.
© 2023 MPS. All Rights Reserved.