TBMA

Test Board for MagAlpha Sensors User Guide

DESCRIPTION

The TBMA is a test board for the MagAlpha magnetic position sensor family. The TBMA allows users to run and test MagAlpha sensors quickly. TBMA boards come in long (LT) format, where the sensor is mounted on the edge of the board, and they can be used in both side-shaft and end-of-shaft configurations.

TBMA test boards are compatible with the MACOM evaluation kit and EVKT-MagAlpha-MagDiff, offering seamless connection and operation of MagAlpha sensors. In addition, these boards allow users to evaluate MagAlpha functionalities and performances with their own set-up.

The TBMA test board only includes the assembled board with the sensor and decoupling capacitors and connectors. It does not include connectors for certain board types.

FEATURES

- Evaluation Board Supports Side-Shaft and End-of-Shaft Mounting
- Compatible with the EVKT-MagAlpha-MagDiff [(1)]

APPLICATIONS

- Servo Drives
- Robotics
- Automotive
- Brushless DC (BLDC) Motor Commutation
- Encoders

All MPS parts are lead-free, halogen-free, and adhere to the RoHS directive. For MPS green status, please visit the MPS website under Quality Assurance. “MPS”, the MPS logo, and “Simple, Easy Solutions” are registered trademarks of Monolithic Power Systems, Inc. or its subsidiaries.

Note:

1) The TBMA is also compatible with the EVKT-MACOM.

OVERVIEW

Figure 1: TBMA Test Boards

MPS Proprietary Information. Patent Protected. Unauthorized Photocopy and Duplication Prohibited.
© 2023 MPS. All Rights Reserved.

BOARD TYPES

Different board types are available, and each has a different schematic and layout design (see Table 1). Determine which board type to use based on the selected sensor part number. The board can be used for both end-of-shaft and side-shaft configuration.

Table 1: Board Type

Board Type	Board Part Number	MPS Chip Part Number
BOARD TYPE **1**	TBMA100-Q-LT	MA100
	TBMA300-Q-LT	MA300
	TBMA700-Q-LT	MA700
	TBMA750-Q-LT	MA750
Board type 2	TBMA102-Q-LT	MA102
	TBMA302-Q-LT	MA302
	TBMA310-Q-LT	MA310
	TBMA702-Q-LT	MA702
	TBMA710-Q-LT	MA710
	TBMA730-Q-LT	MA730
	TBMA800-Q-LT	MA800
	TBMA820-Q-LT	MA820
	TBMA850-Q-LT	MA850
	TBMA704-Q-LT	MA704
	TBMA330-Q-LT	MA330
	TBMA732-Q-LT	MA732
	TBMAQ430-Q-LT	MAQ430
	TBMAQ470-Q-LT	MAQ470
	TBMAQ473-Q-LT	MAQ473
Board type 3	TBMA780-Q-LT	MA780
Board type 4	TBMA782-Q-LT	MA782
Board type 5	TBMA734-Q-LT	MA734
Board type 6	TBMA735-Q-LT	MA735
Board type 7	TBMA736-Q-LT	MA736

MPS Proprietary Information. Patent Protected. Unauthorized Photocopy and Duplication Prohibited.
© 2023 MPS. All Rights Reserved.

TBMA CONTENTS

Figure 2 shows the TBMA test board contents, with each element described in the list below:

1. One TBMA board with a mounted MagAlpha sensor
2. Decoupling capacitors
3. Connector

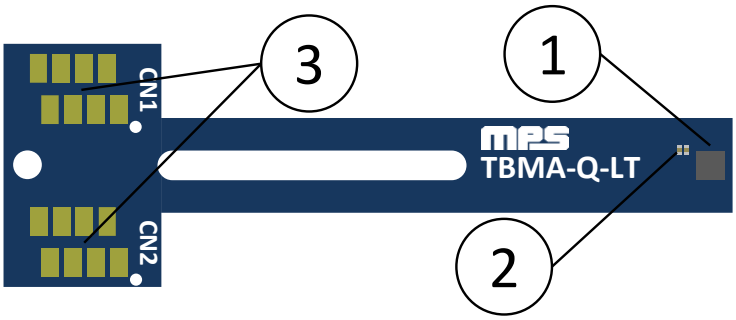

Figure 2: TBMA Contents

MPS Proprietary Information. Patent Protected. Unauthorized Photocopy and Duplication Prohibited.
© 2023 MPS. All Rights Reserved.

BOARD TYPE 1

Figure 3 shows an overview of the type 1 long (LT) board.

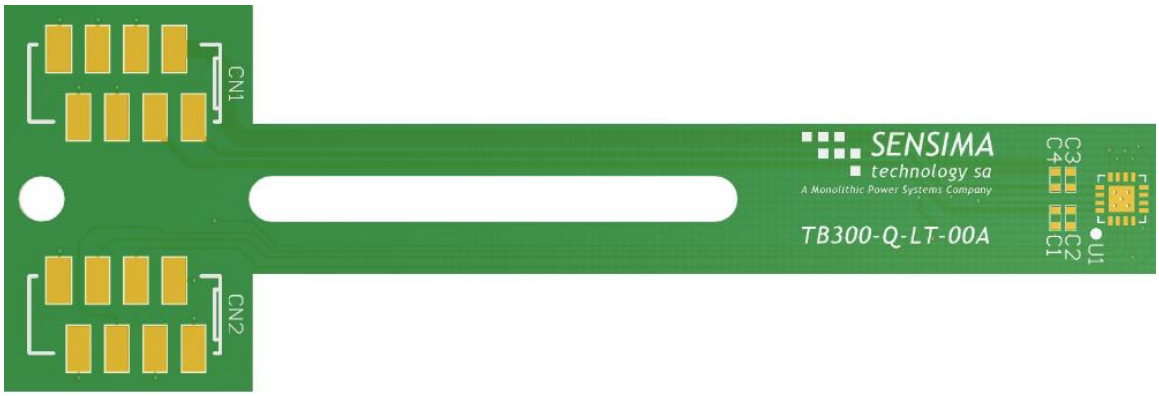

Figure 3: Type 1 Board Overview

Schematic

Figure 4 shows a schematic for the type 1 board.

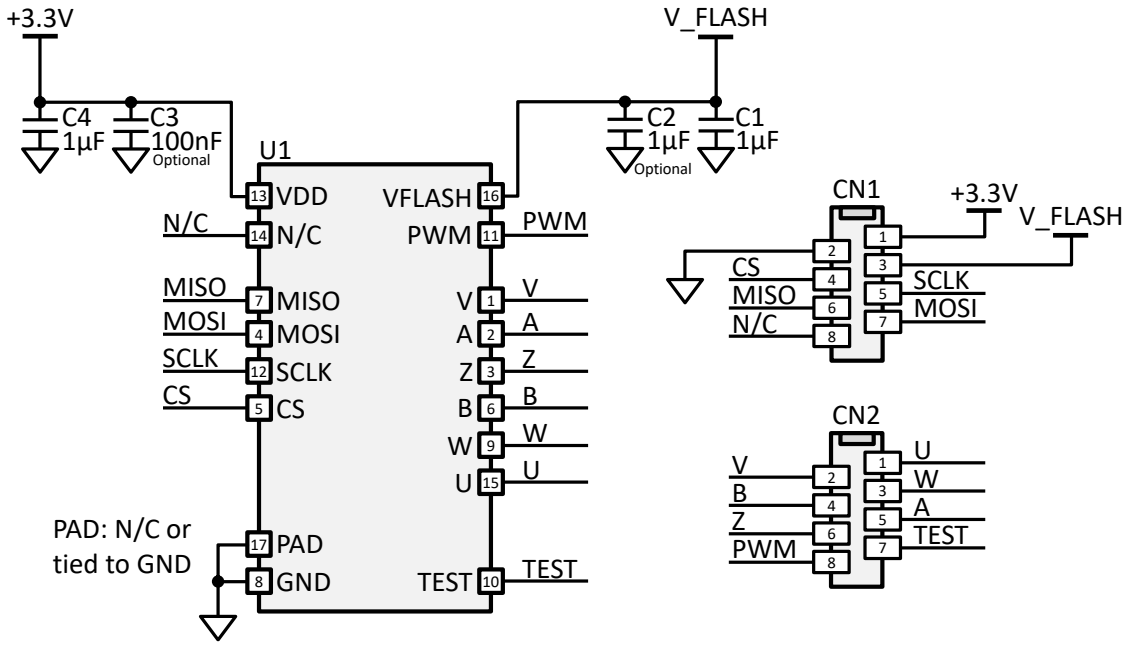

Figure 4: Type 1 Board Schematic

MPS Proprietary Information. Patent Protected. Unauthorized Photocopy and Duplication Prohibited.
© 2023 MPS. All Rights Reserved.

Bill of Materials (BOM)

Table 2 shows the type 1 board bill of materials (BOM).

Table 2: Type 1 Board BOM

Qty	Ref	Value	Description	Manufacturer	Manufacturer PN
2	C1, C4	1µF	Ceramic capacitor, 10V, X6S, 0402	Murata	GRM155C81A105KA12D
1	C2 (optional)	1µF	Ceramic capacitor, 10V, X6S, 0402	Murata	GRM155C81A105KA12D
1	C3 (optional)	100nF	Ceramic capacitor, 16V, X7R, 0402	Murata	GRM155R71C104KA88J
1	U1	MAxxx	MagAlpha magnetic position sensor	MPS	N/A
2	CN1, CN2 (not populated)	2.54mm	8-position receptacle connector, 0.100” (2.54mm), surface-mount tin	Wurth or TE Connectivity	690367280876 or 7-2178711-8

Assembly View

Figure 5 shows the top-side assembly view of the type 1 board.

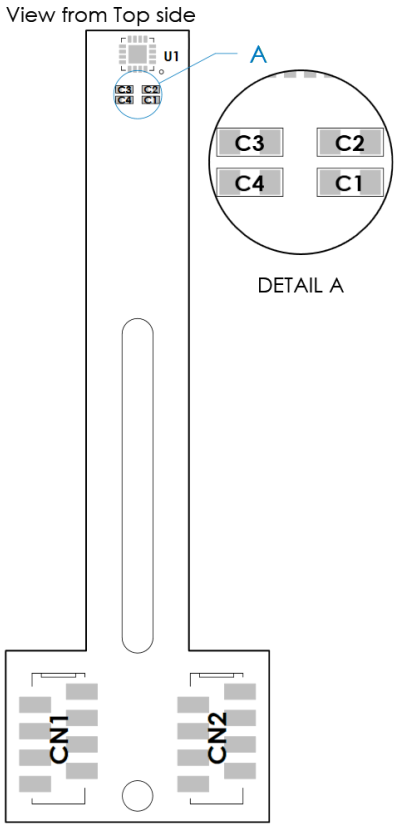

Figure 5: Type 1 Board Assembly View

MPS Proprietary Information. Patent Protected. Unauthorized Photocopy and Duplication Prohibited.
© 2023 MPS. All Rights Reserved.

Mechanical Drawing

Figure 6 shows the top-side mechanical drawing of the type 1 board.

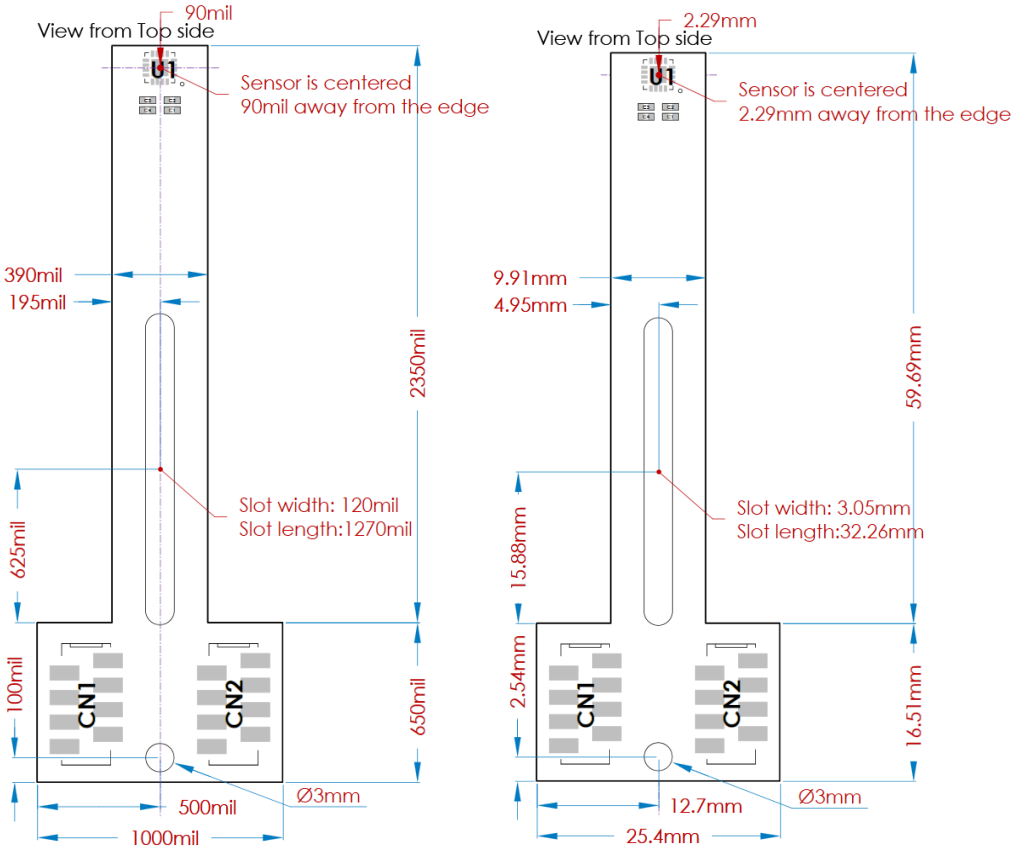

Figure 6: Type 1 Board Mechanical Drawing (mil = 0.001” = 0.0254mm)

MPS Proprietary Information. Patent Protected. Unauthorized Photocopy and Duplication Prohibited.
© 2023 MPS. All Rights Reserved.

Connector Pinout

Figure 7 shows the type 1 board connector pinout.

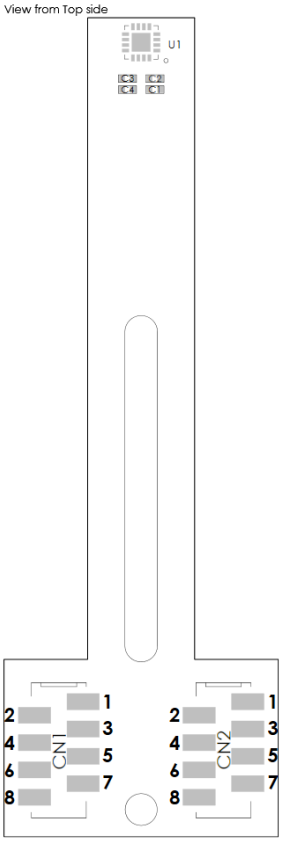

Figure 7: Type 1 Board Connector Pinout

Table 3 shows the type 1 board pin registers.

Table 3: Type 1 Board Connector Pin Registers

Pin	Name	Description
CN1.1	VDD	3.3V supply.
CN1.2	GND	Ground.
CN1.3	VFLASH	Flash power supply (3.9V only powered during flashing).
CN1.4	CS	Chip select (serial).
CN1.5	SCLK	Clock (serial).
CN1.6	MISO	Master in, slave out (serial).
CN1.7	MOSI	Master out, slave in (serial).
CN1.8	-	Leave disconnected.
CN2.1	U (2)	U output (optional motor commutation).
CN2.2	V (2)	V output (optional motor commutation).
CN2.3	W (2)	W output (optional motor commutation).
CN2.4	A (2)	A output (optional incremental encoder).
CN2.5	B (2)	B output (optional incremental encoder).
CN2.6	Z (2)	Z output (optional incremental encoder).
CN2.7	TEST	Test pin.
CN2.8	PWM (2)	Pulse-width modulation output (optional).

Note:

2) Availability of this option depends on the MagAlpha part number. Refer directly to the part's datasheet.

MPS Proprietary Information. Patent Protected. Unauthorized Photocopy and Duplication Prohibited.
© 2023 MPS. All Rights Reserved.

BOARD TYPE 2

Figure 8 shows an overview of the type 2 long board.

Figure 8: Type 2 Board Overview

Schematic

Figure 9 shows a schematic for the type 2 board.

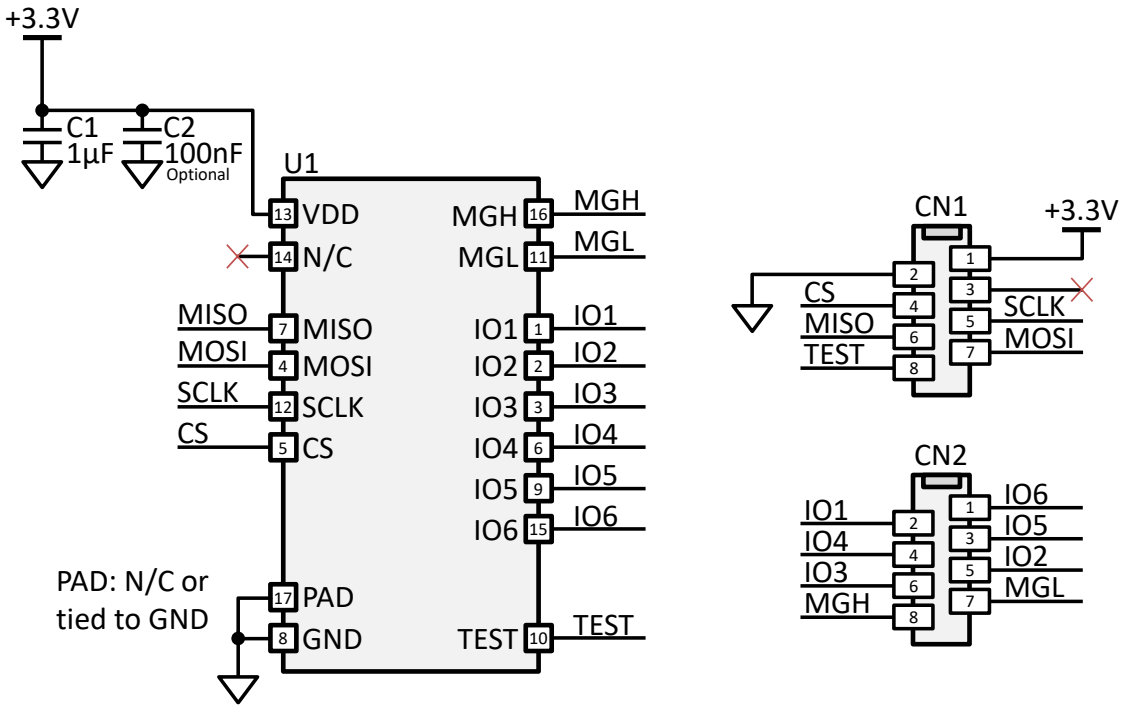

Figure 9: Type 2 Board Schematic

MPS Proprietary Information. Patent Protected. Unauthorized Photocopy and Duplication Prohibited.
© 2023 MPS. All Rights Reserved.

Bill of Materials (BOM)

Table 4 shows the type 2 board BOM.

Table 4: Type 2 Board Bill of Materials

Qty	Ref	Value	Description	Manufacturer	Manufacturer PN
1	C1	1µF	Ceramic capacitor, 10V, X6S, 0402	Murata	GRM155C81A105KA12D
1	C2 (not populated)	100nF	Ceramic capacitor, 16V, X7R, 0402	Murata	GRM155R71C104KA88J
1	U1	MAxxx	MagAlpha magnetic position sensor	MPS	N/A
2	CN1, CN2 (not populated)	2.54mm	8-position receptacle connector, 0.100” (2.54mm), surface-mount tin	Wurth or TE Connectivity	690367280876 or 7-2178711-8

Assembly View

Figure 10 shows the top-side assembly view of the type 2 board.

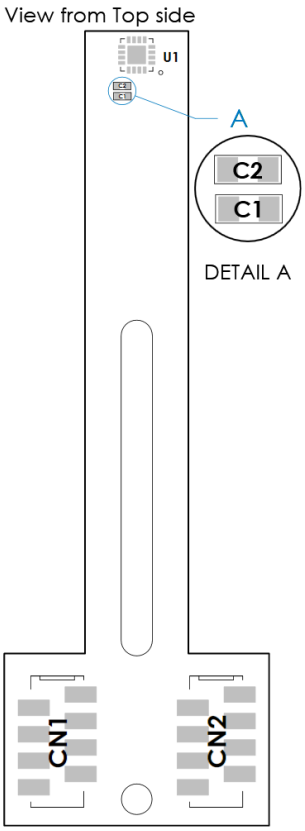

Figure 10: Type 2 Board Assembly View

MPS Proprietary Information. Patent Protected. Unauthorized Photocopy and Duplication Prohibited.
© 2023 MPS. All Rights Reserved.

Mechanical Drawing

Figure 11 shows the top-side mechanical drawing of the type 2 board.

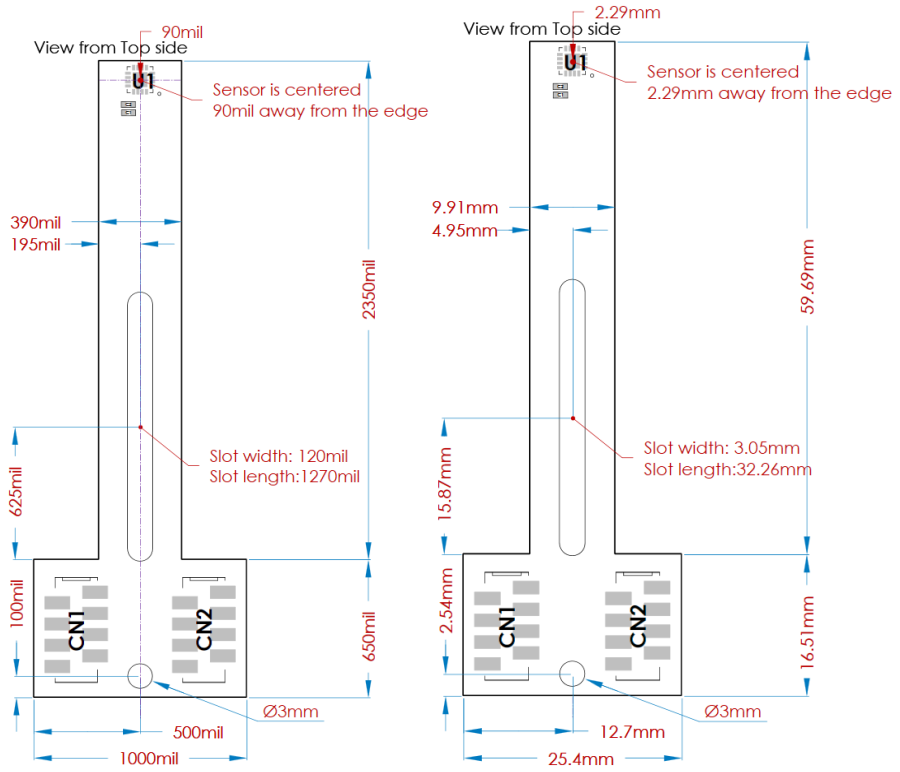

Figure 11: Type 2 Board Mechanical Drawing (mil = 0.001” = 0.0254mm)

MPS Proprietary Information. Patent Protected. Unauthorized Photocopy and Duplication Prohibited.
© 2023 MPS. All Rights Reserved.

Connector Pinout

Figure 12 shows the type 2 board connector pinout.

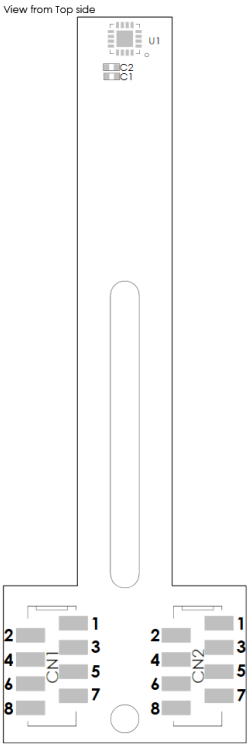

Figure 12: Type 2 Board Connector Pinout

Table 5 shows the type 2 board pin registers.

Table 5: Type 2 Board Connector Pin Registers

Pin	Name	Description
CN1.1	VDD	3.3V supply.
CN1.2	GND	Ground.
CN1.3	-	-
CN1.4	CS	Chip select (serial).
CN1.5	SCLK	Clock (serial).
CN1.6	MISO	Master in, slave out (serial).
CN1.7	MOSI	Master out, slave in (serial).
CN1.8	TEST	Test pin.
CN2.1	IO6 (3)	Pin 15 (I/O).
CN2.2	IO1 (3)	Pin 1 (I/O).
CN2.3	IO5 (3)	Pin 9 (I/O).
CN2.4	IO4 (3)	Pin 6 (I/O).
CN2.5	IO2 (3)	Pin 2 (I/O).
CN2.6	IO3 (3)	Pin 3 (I/O).
CN2.7	MGL (4)	Magnetic level low (optional).
CN2.8	MGH (4)	Magnetic level high (optional).

Notes:

3) Refer to the MagAlpha part's datasheet to know which features are available on these pins.
4) Availability of this option depends on the MagAlpha part number. Refer directly to the part's datasheet.

MPS Proprietary Information. Patent Protected. Unauthorized Photocopy and Duplication Prohibited.
© 2023 MPS. All Rights Reserved.

BOARD TYPE 3

Figure 13 shows an overview of the type 3 board.

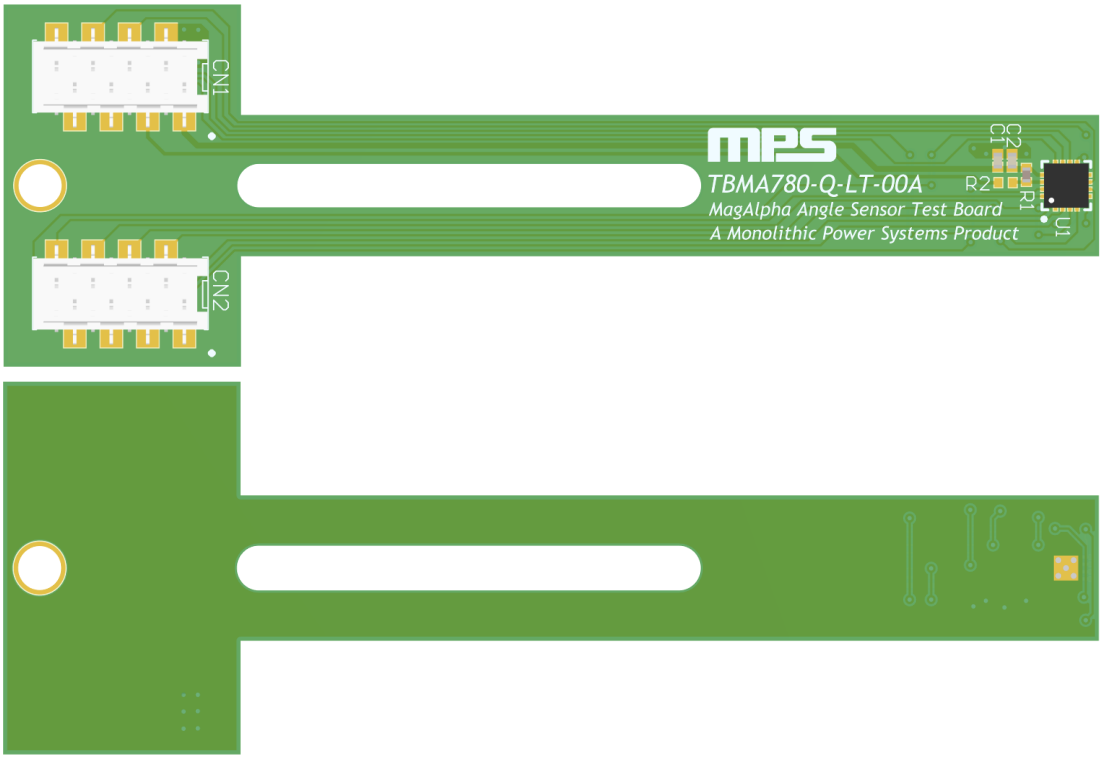

Figure 13: Type 3 Board Overview

Schematic

Figure 14 shows a schematic for the type 3 board.

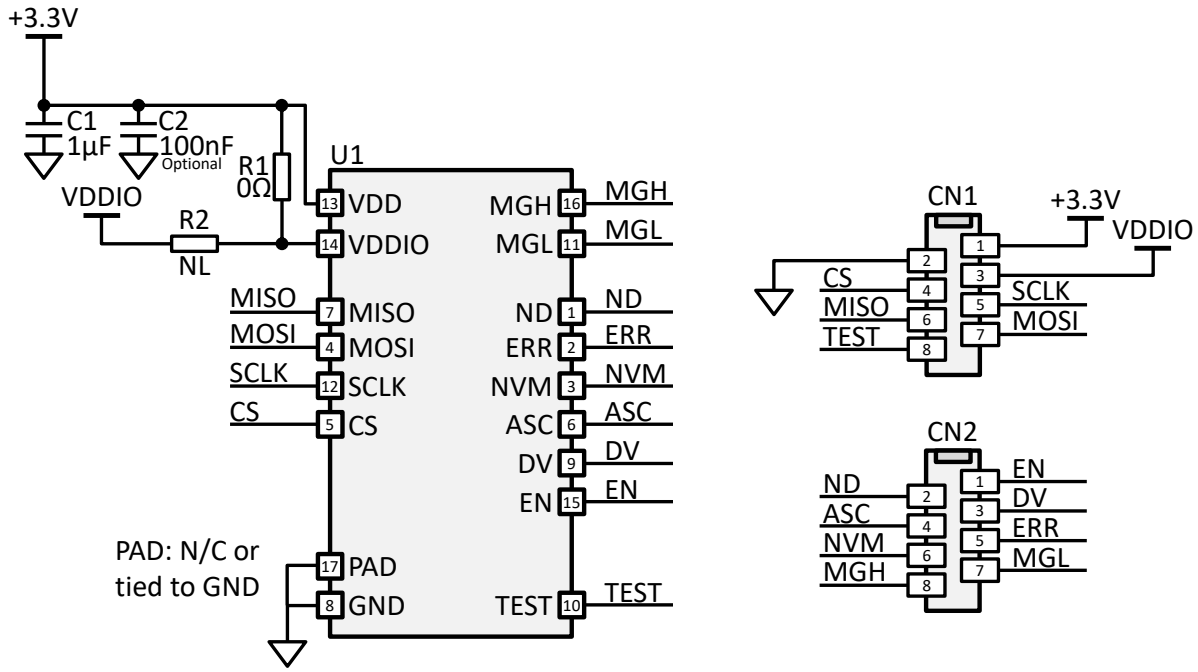

Figure 14: Type 3 Board Schematic

MPS Proprietary Information. Patent Protected. Unauthorized Photocopy and Duplication Prohibited.
© 2023 MPS. All Rights Reserved.

Bill of Materials (BOM)

Table 6 shows the type 3 board BOM.

Table 6: Type 3 Board Bill of Materials

Qty	Ref	Value	Description	Manufacturer	Manufacturer PN
1	C1	1µF	Ceramic capacitor, 10V, X6S, 0402	Murata	GRM155C81A105KA12D
1	C2 (not populated)	100nF	Ceramic capacitor, 16V, X7R, 0402	Murata	GRM155R71C104KA88J
1	R1 (populated), R2 (not populated)	0Ω	0Ω resistor, 0402	Panasonic	ERJ-2GE0R00X
1	U1	MA780	MagAlpha magnetic position sensor	MPS	MA780GQ
2	CN1, CN2 (not populated)	2.54mm	8-position receptacle connector, 0.100” (2.54mm), surface-mount tin	Wurth or TE Connectivity	690367280876 or 7-2178711-8

Assembly View

Figure 15 shows the top-side assembly view of the type 3 board.

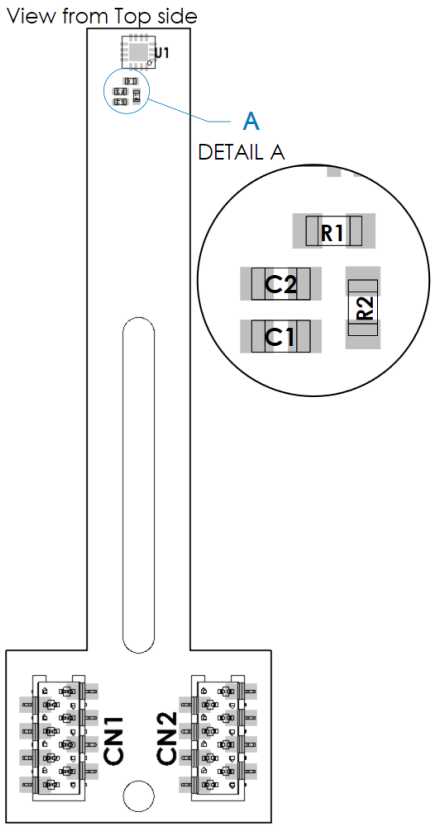

Figure 15: Type 3 Board Assembly View

MPS Proprietary Information. Patent Protected. Unauthorized Photocopy and Duplication Prohibited.
© 2023 MPS. All Rights Reserved.

Mechanical Drawing

Figure 16 shows the top-side mechanical drawing of the type 3 board.

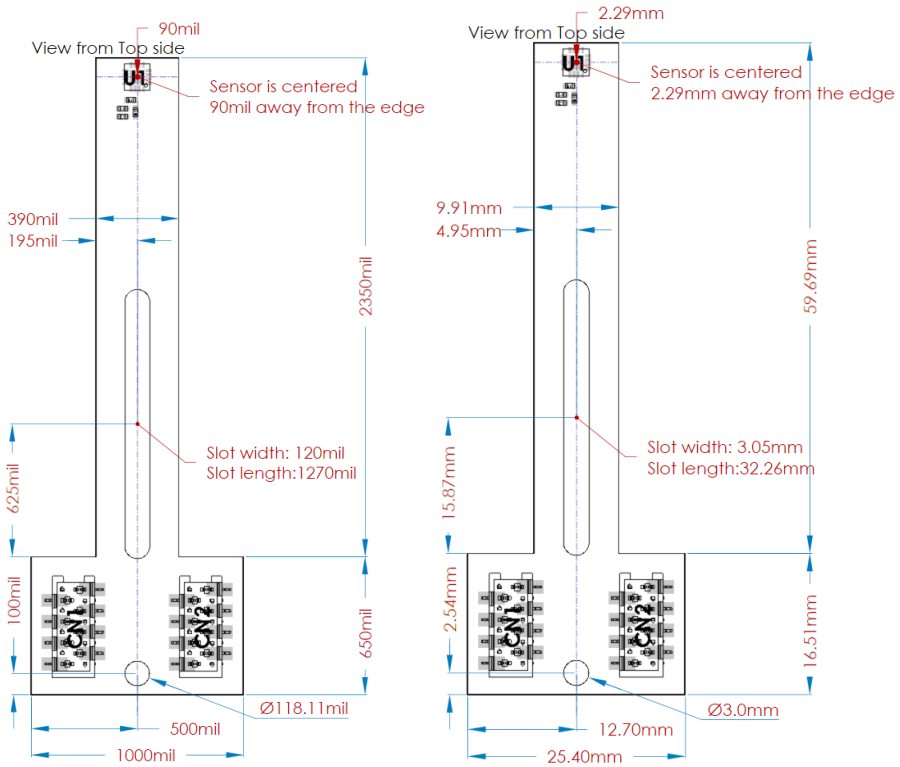

Figure 16: Type 3 Board Mechanical Drawing (mil = 0.001” = 0.0254mm)

MPS Proprietary Information. Patent Protected. Unauthorized Photocopy and Duplication Prohibited.
© 2023 MPS. All Rights Reserved.

Connector Pinout

Figure 17 shows the type 3 board connector pinout.

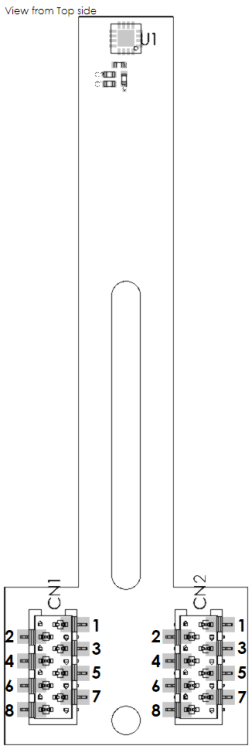

Figure 17: Type 3 Connector Pinout

Table 7 shows the type 3 board pin registers.

Table 7: Type 3 Board Connector Pin Registers

Pin	Name	Description
CN1.1	VDD	3.3V supply.
CN1.2	GND	Ground.
CN1.3	VDDIO	1.8V to 3.3V supply for I/Os.
CN1.4	CS	Chip select (serial).
CN1.5	SCLK	Clock (serial).
CN1.6	MISO	Master in, slave out (serial).
CN1.7	MOSI	Master out, slave in (serial).
CN1.8	TEST	Test pin.
CN2.1	EN	Enable (input). Switches the sensor to active mode.
CN2.2	ND	New data (output).
CN2.3	DV	Data valid (output).
CN2.4	ASC	Auto-power cycling mode (input).
CN2.5	ERR	Error flag (output).
CN2.6	NVM	Non-volatile memory (output).
CN2.7	MGL (5)	Magnetic level low (optional).
CN2.8	MGH (5)	Magnetic level high (optional).

Note:

5) Availability of this option depends on the MagAlpha part number. Refer directly to the part's datasheet.

MPS Proprietary Information. Patent Protected. Unauthorized Photocopy and Duplication Prohibited.
© 2023 MPS. All Rights Reserved.

BOARD TYPE 4

Figure 18 shows an overview of the type 4 board.

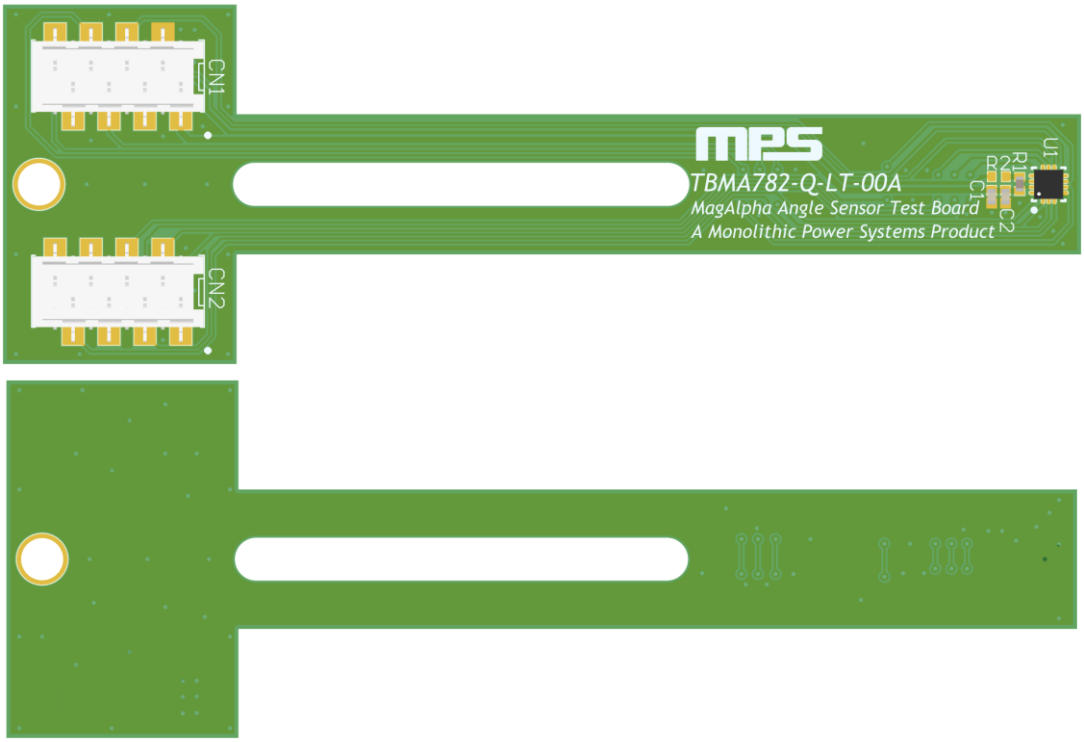

Figure 18: Type 4 Board Overview

Schematic

Figure 19 shows a schematic for the type 4 board.

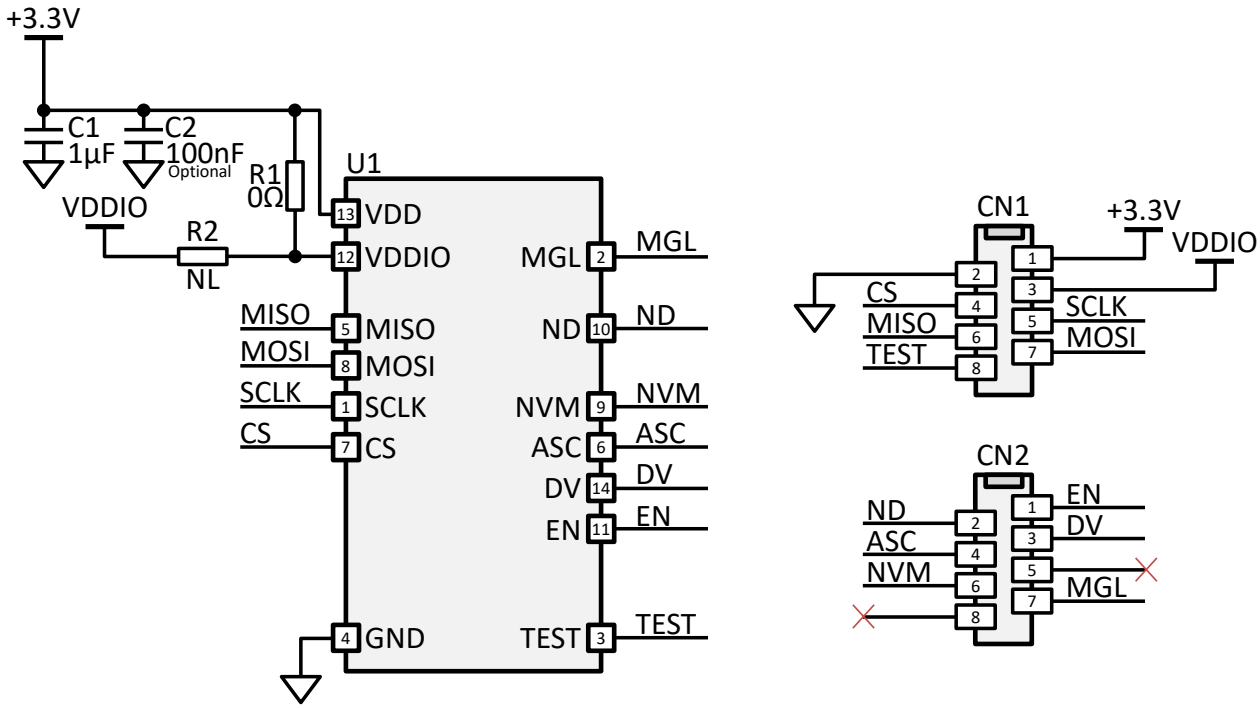

Figure 19: Type 4 Board Schematic

MPS Proprietary Information. Patent Protected. Unauthorized Photocopy and Duplication Prohibited.
© 2023 MPS. All Rights Reserved.

Bill of Materials (BOM)

Table 8 shows the type 4 board BOM.

Table 8: Type 4 Board Bill of Materials

Qty	Refr	Value	Description	Manufacturer	Manufacturer PN
1	C1	1µF	Ceramic capacitor, 10V, X6S, 0402	Murata	GRM155C81A105KA12D
1	C2 (not populated)	100nF	Ceramic capacitor, 16V, X7R, 0402	Murata	GRM155R71C104KA88J
1	R1 (populated), R2 (not populated)	0Ω	0Ω resistor, 0402	Panasonic	ERJ-2GE0R00X
1	U1	MA782	MagAlpha magnetic position sensor	MPS	MA782GGU
2	CN1, CN2 (not populated)	2.54mm	8-position receptacle connector, 0.100” (2.54mm), surface-mount tin	Wurth or TE Connectivity	690367280876 or 7-2178711-8

Assembly View

Figure 20 shows the top-side assembly view of the type 4 board.

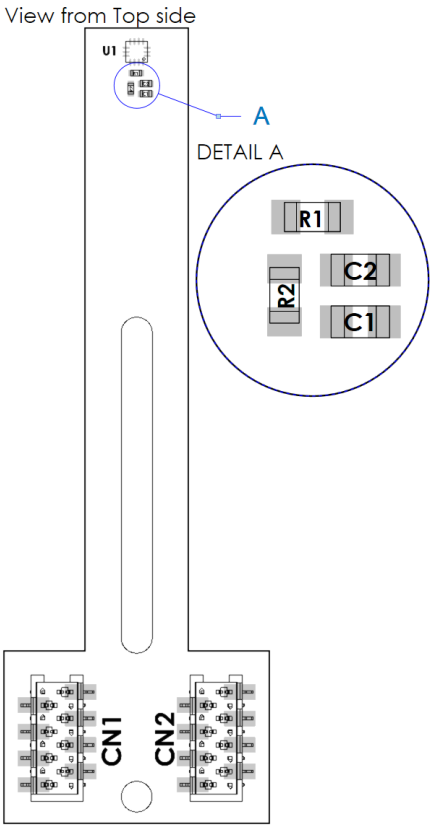

Figure 20: Type 4 Board Assembly View

MPS Proprietary Information. Patent Protected. Unauthorized Photocopy and Duplication Prohibited.
© 2023 MPS. All Rights Reserved.

Mechanical Drawing

Error! Reference source not found. Figure 21 shows the top-side mechanical drawing of the type 4 board.

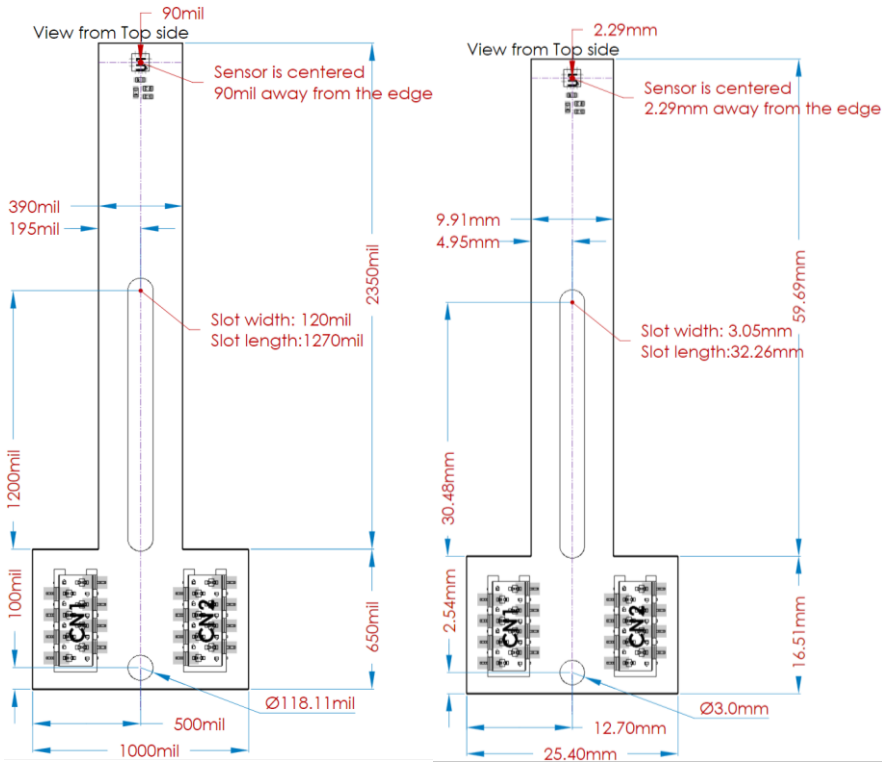

Figure 21: Type 4 Board Mechanical Drawing (mil = 0.001” = 0.0254mm)

MPS Proprietary Information. Patent Protected. Unauthorized Photocopy and Duplication Prohibited.
© 2023 MPS. All Rights Reserved.

Connector Pinout

Figure 22 shows the type 4 board connector pinout.

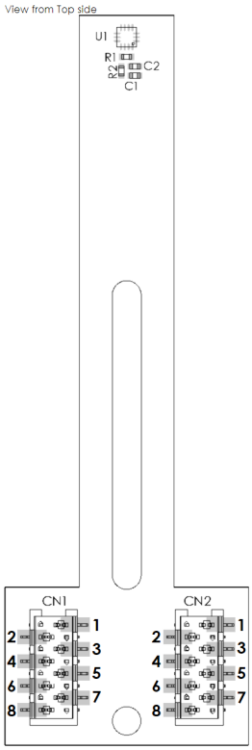

Figure 22: Type 4 Connector Pinout

Table 9 shows the type 4 board pin registers.

Table 9: Type 4 Board Connector Pin Registers

Pin	Name	Description
CN1.1	VDD	3.3V supply.
CN1.2	GND	Ground.
CN1.3	VDDIO	1.8V to 3.3V supply for I/Os.
CN1.4	CS	Chip select (serial).
CN1.5	SCLK	Clock (serial).
CN1.6	MISO	Master in, slave out (serial).
CN1.7	MOSI	Master out, slave in (serial).
CN1.8	TEST	Test pin.
CN2.1	EN	Enable (input). Switches the sensor to active mode.
CN2.2	ND	New data (output).
CN2.3	DV	Data valid (output).
CN2.4	ASC	Auto-power cycling mode (input).
CN2.5	-	-
CN2.6	NVM	Non-volatile memory (output).
CN2.7	MGL [6]	Magnetic level low (optional).
CN2.8	-	-

Note:

6) Availability of this option depends on the MagAlpha part number. Refer directly to the related part's datasheet.

MPS Proprietary Information. Patent Protected. Unauthorized Photocopy and Duplication Prohibited.
© 2023 MPS. All Rights Reserved.

BOARD TYPE 5

Figure 23 shows an overview of the type 5 board.

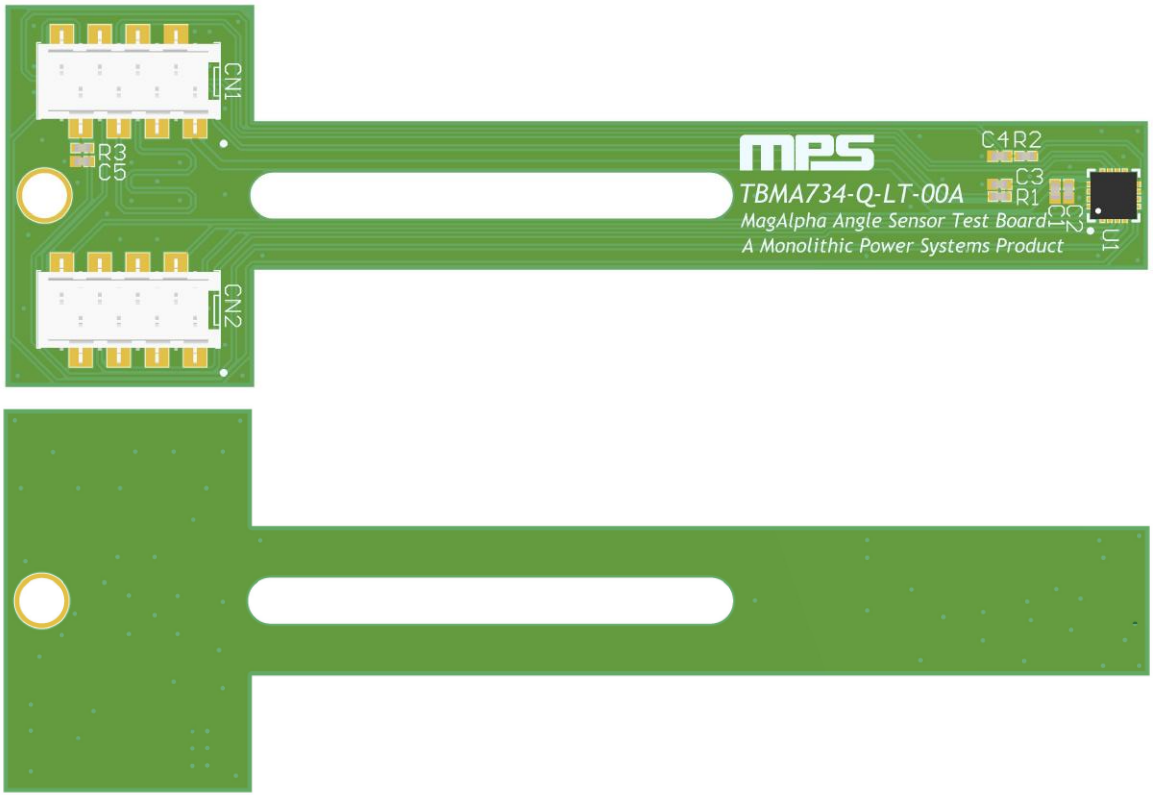

Figure 23: Type 5 Board Overview

Schematic

Figure 24 shows a schematic for the type 5 board.

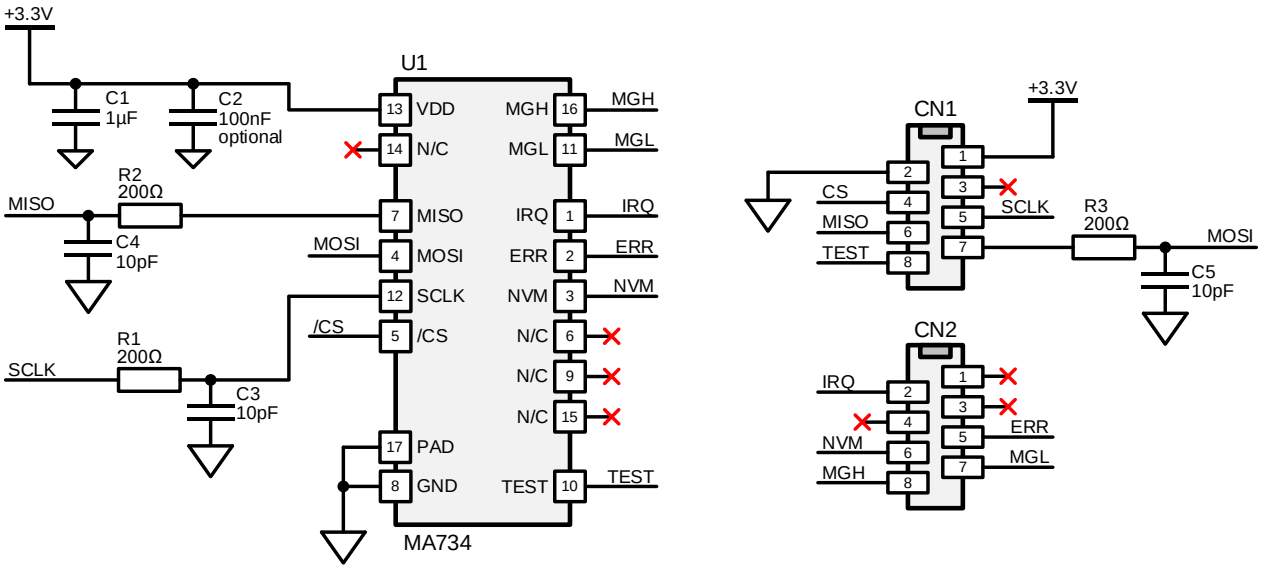

Figure 24: Type 5 Board Schematic

MPS Proprietary Information. Patent Protected. Unauthorized Photocopy and Duplication Prohibited.
© 2023 MPS. All Rights Reserved.

Bill of Materials (BOM)

Table 10 shows the type 5 board BOM.

Table 10: Type 5 Board Bill of Materials

Qty	Ref	Value	Description	Manufacturer	Manufacturer PN
1	C1	1µF	Ceramic capacitor, 10V, X6S, 0402	Murata	GRM155C81A105KA12D
1	C2 (optional)	100nF	Ceramic capacitor, 16V, X7R, 0402	Murata	GRM155R71C104KA88J
3	R1, R2, R3	200Ω	200Ω resistor, 0402	Yageo	RC0402FR-07200RL
3	C3, C4, C5	10pF	Ceramic capacitor, 50V, C0G, 0402	Yageo	CC0402JRNPO9BN100
1	U1	MA734	MagAlpha magnetic position sensor	MPS	MA734
2	CN1, CN2	2.54mm	8-position receptacle connector, 0.100” (2.54mm), surface-mount tin	Wurth or TE Connectivity	690367280876 or 7-2178711-8

Assembly View

Figure 25 shows the top-side assembly view of the type 5 board.

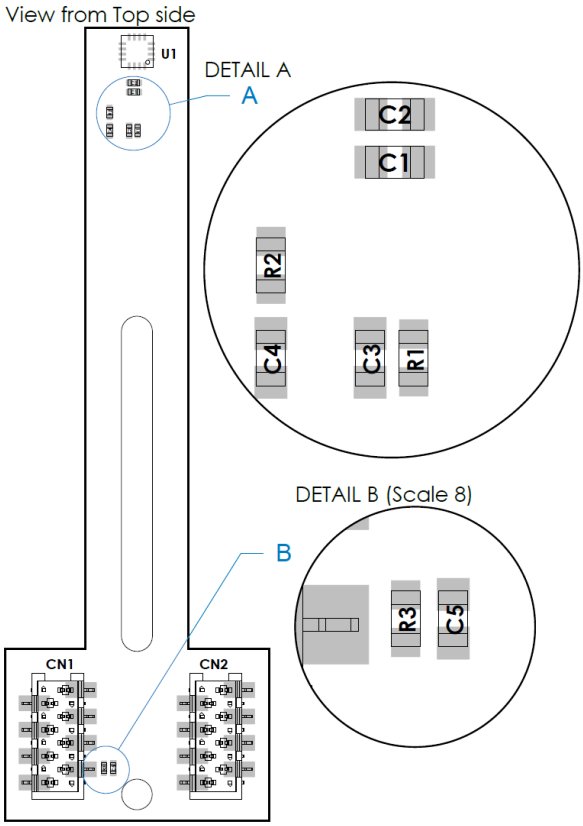

Figure 25: Type 5 Board Assembly View

MPS Proprietary Information. Patent Protected. Unauthorized Photocopy and Duplication Prohibited.
© 2023 MPS. All Rights Reserved.

Mechanical Drawing

Figure 26 shows the top-side mechanical drawing of the type 5 board.

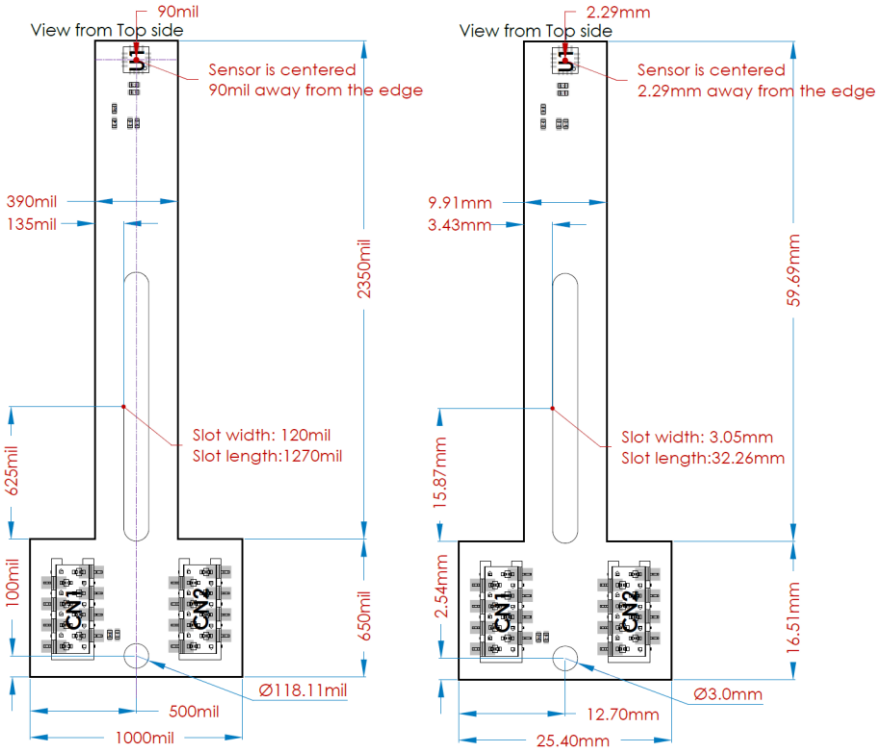

Figure 26: Type 5 Board Mechanical Drawing (mil = 0.001” = 0.0254mm)

MPS Proprietary Information. Patent Protected. Unauthorized Photocopy and Duplication Prohibited.
© 2023 MPS. All Rights Reserved.

Connector Pinout

Figure 27 shows the type 5 board connector pinout.

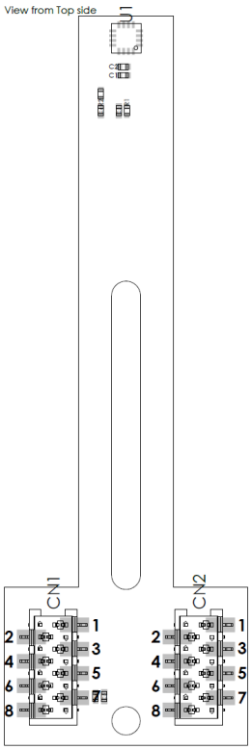

Figure 27: Type 5 Connector Pinout

Table 11 shows the type 5 board pin registers.

Table 11: Type 5 Board Connector Pin Registers

Pin	Name	Description
CN1.1	VDD	3.3V supply.
CN1.2	GND	Ground.
CN1.3	NC	Not connected.
CN1.4	CS	Chip select (serial).
CN1.5	SCLK	Clock (serial).
CN1.6	MISO	Master in, slave out (serial).
CN1.7	MOSI	Master out, slave in (serial).
CN1.8	TEST	Test pin.
CN2.1	NC	Not connected.
CN2.2	IRQ	Interrupt on angle change (output).
CN2.3	NC	Not connected.
CN2.4	NC	Not connected.
CN2.5	ERR	Error flag (output).
CN2.6	NVM	Non-volatile memory (output).
CN2.7	MGL	Magnetic level low (optional).
CN2.8	MGH	Magnetic level high (optional).

MPS Proprietary Information. Patent Protected. Unauthorized Photocopy and Duplication Prohibited.
© 2023 MPS. All Rights Reserved.

BOARD TYPE 6

Figure 28 shows an overview of the type 6 board.

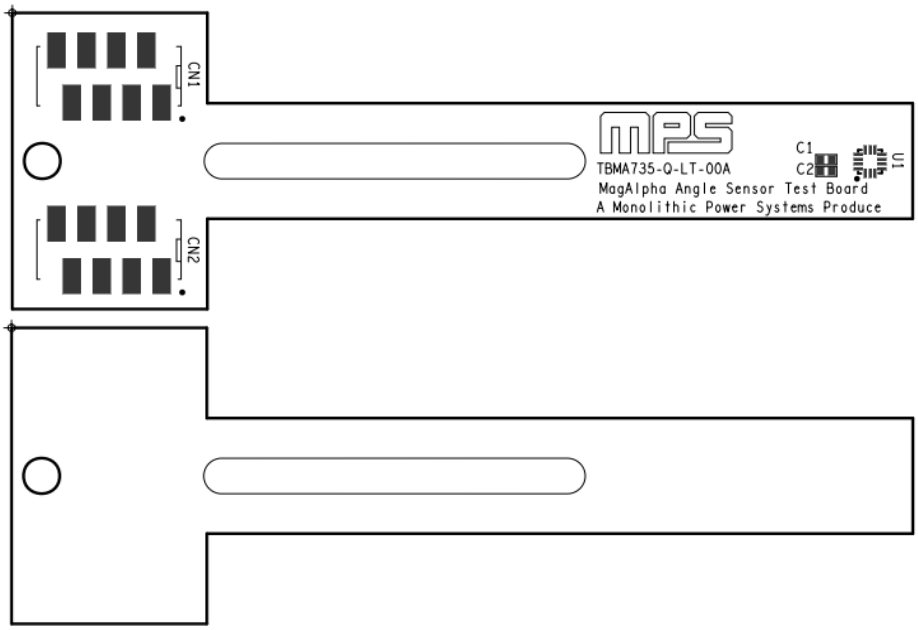

Figure 28: Type 6 Board Overview

Schematic

Figure 29 shows a schematic for the type 6 board.

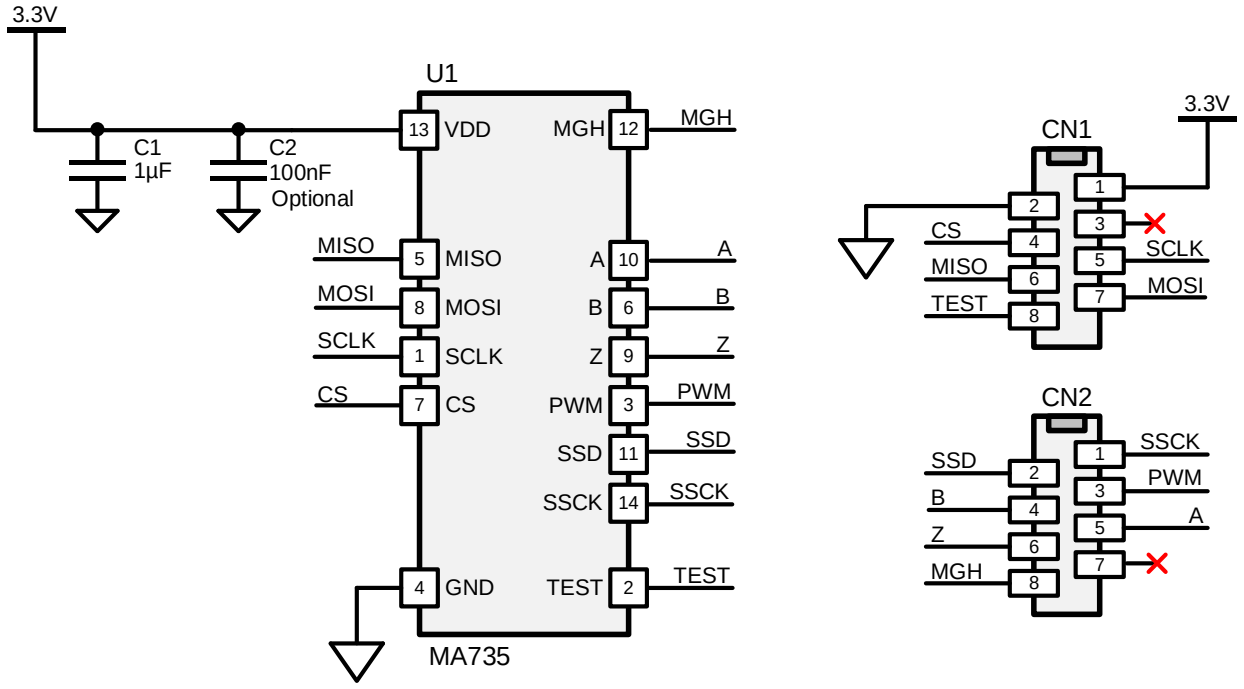

Figure 29: Type 6 Board Schematic

MPS Proprietary Information. Patent Protected. Unauthorized Photocopy and Duplication Prohibited.
© 2023 MPS. All Rights Reserved.

Bill of Materials (BOM)

Table 12 shows the type 6 board BOM.

Table 12: Type 6 Board Bill of Materials

Qty	Ref	Value	Description	Manufacturer	Manufacturer PN
1	C1	1µF	Ceramic capacitor, 10V, X6S, 0402	Murata	GRM155C81A105KA12D
1	C2 (optional)	100nF	Ceramic capacitor, 16V, X7R, 0402	Murata	GRM155R71C104KA88J
1	U1	MA735	MagAlpha magnetic position sensor	MPS	MA735
2	CN1, CN2	2.54mm	8-position receptacle connector, 0.100” (2.54mm), surface-mount tin	Wurth or TE Connectivity	690367280876 or 7-2178711-8

Mechanical Drawing

Figure 30 shows the top-side mechanical drawing of the type 6 board.

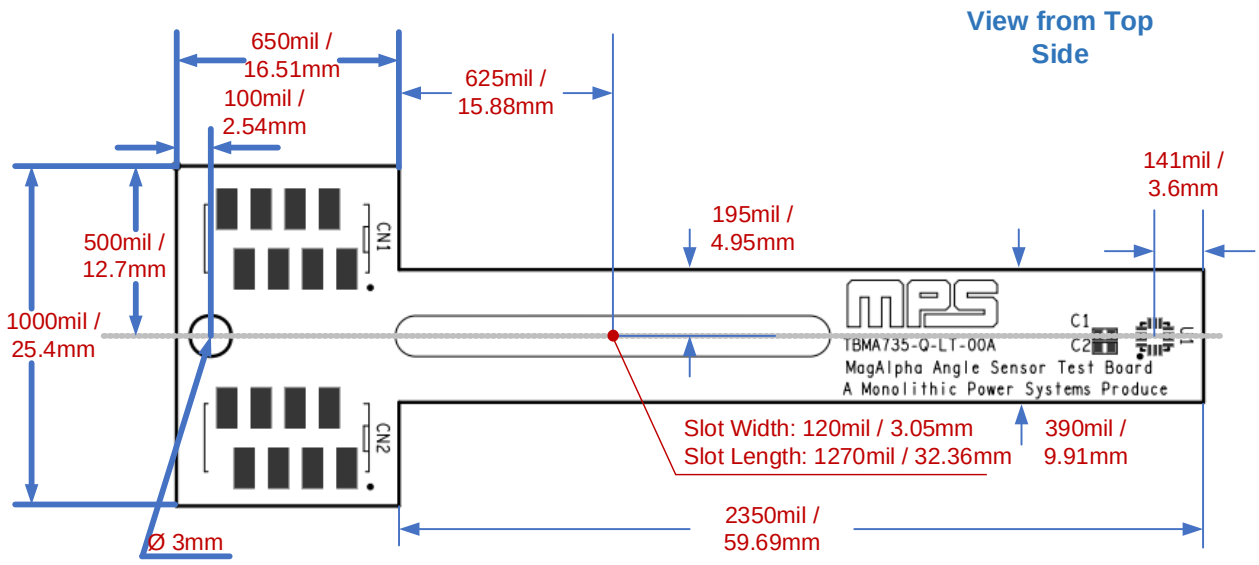

Figure 30: Type 6 Board Mechanical Drawing (mil = 0.001” = 0.0254mm)

Connector Pinout

Figure 31 shows the type 6 board connector pinout.

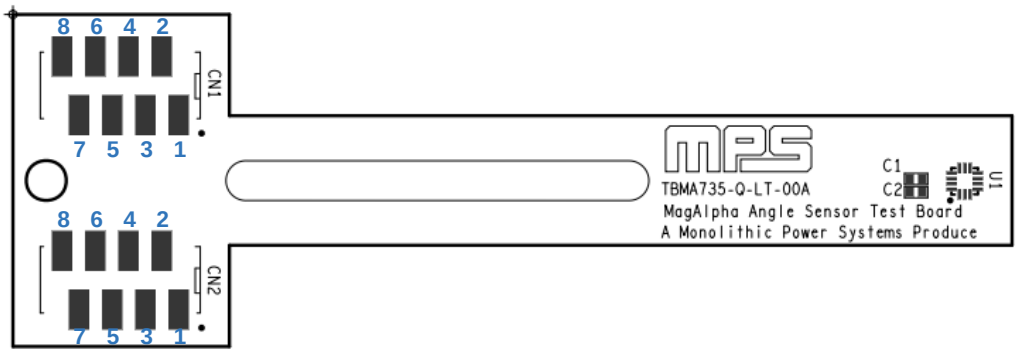

Figure 31: Type 6 Board Connector Pinout

MPS Proprietary Information. Patent Protected. Unauthorized Photocopy and Duplication Prohibited.
© 2023 MPS. All Rights Reserved.

Table 13 shows the type 6 board pin registers.

Table 13: Type 6 Board Connector Pin Registers

Pin	Name	Description
CN1.1	VDD	3.3V supply.
CN1.2	GND	Ground.
CN1.3	NC	Not connected.
CN1.4	CS	Chip select (serial).
CN1.5	SCLK	Clock (serial).
CN1.6	MISO	Master in, slave out (serial).
CN1.7	MOSI	Master out, slave in (serial).
CN1.8	TEST	Test pin.
CN2.1	SSCK	Clock (SSI).
CN2.2	SSD	Data out (SSI).
CN2.3	PWM	PWM output.
CN2.4	B	Incremental output.
CN2.5	A	Incremental output.
CN2.6	Z	Incremental output.
CN2.7	NC	Not connected.
CN2.8	MGH	Magnetic level high (output).

MPS Proprietary Information. Patent Protected. Unauthorized Photocopy and Duplication Prohibited.
© 2023 MPS. All Rights Reserved.

BOARD TYPE 7

Figure 32 shows an overview of the type 7 board.

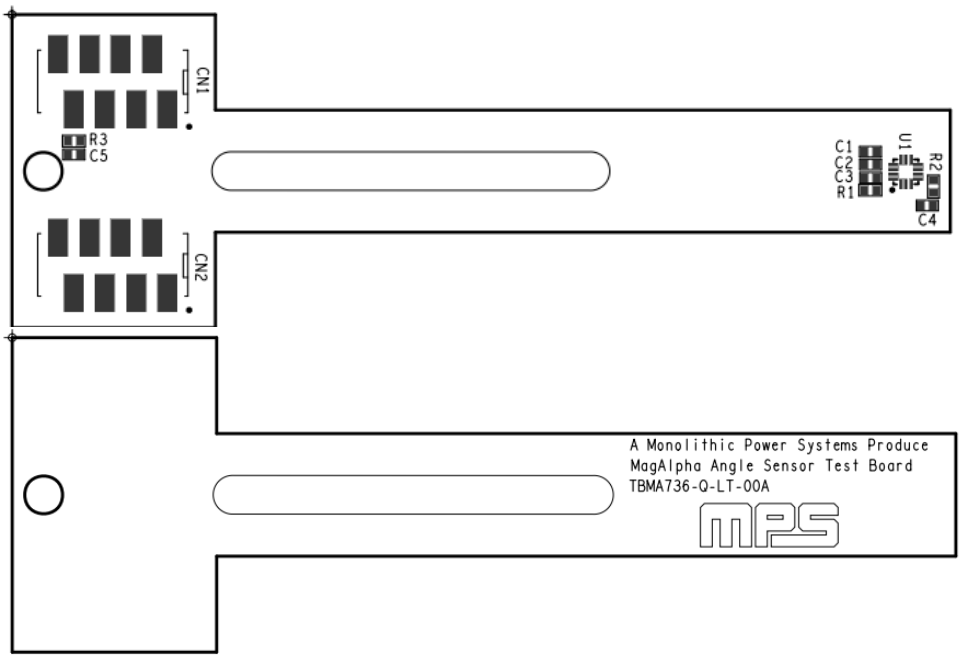

Figure 32: Type 7 Board Overview

Schematic

Figure 33 shows a schematic for the type 7 board.

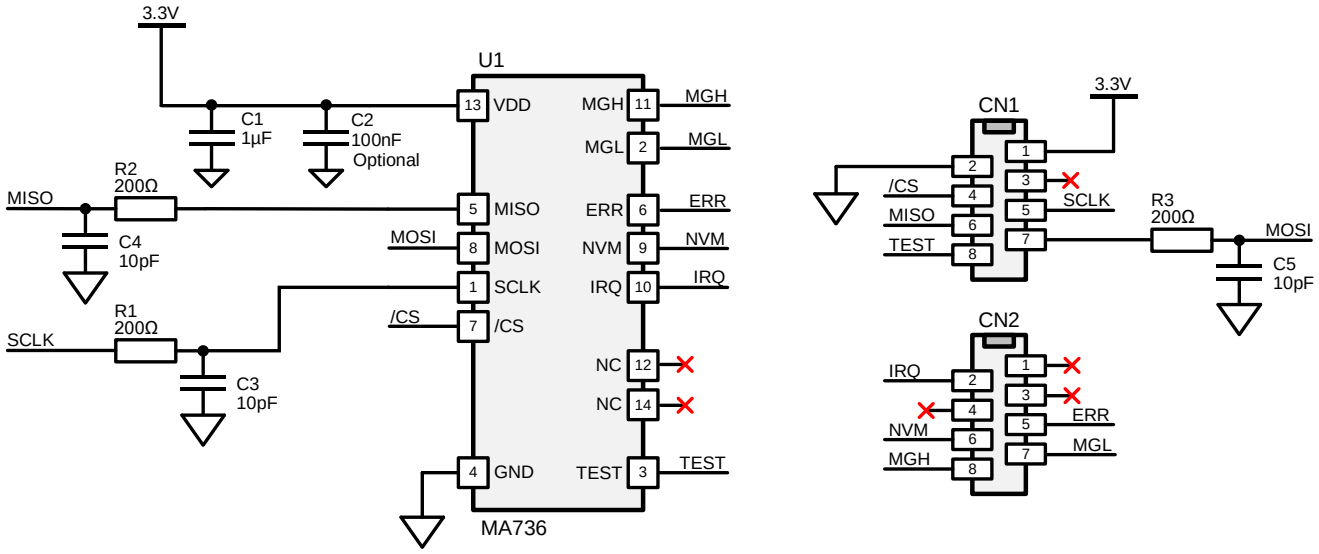

Figure 33: Type 7 Board Schematic

MPS Proprietary Information. Patent Protected. Unauthorized Photocopy and Duplication Prohibited.
© 2023 MPS. All Rights Reserved.

Bill of Materials (BOM)

Table 14 shows the type 7 board BOM.

Table 14: Type 7 Board Bill of Materials

Qty	Ref	Value	Description	Manufacturer	Manufacturer PN
1	C1	1µF	Ceramic capacitor, 10V, X6S, 0402	Murata	GRM155C81A105KA12D
1	C2 (optional)	100nF	Ceramic capacitor, 16V, X7R, 0402	Murata	GRM155R71C104KA88J
3	R1, R2, R3	200Ω	200Ω resistor, 0402	Yageo	RC0402FR-07200RL
3	C3, C4, C5	10pF	Ceramic capacitor, 50V, C0G, 0402	Yageo	CC0402JRNPO9BN100
1	U1	MA736	MagAlpha magnetic position sensor	MPS	MA736
2	CN1, CN2	2.54mm	8-position receptacle connector, 0.100” (2.54mm), surface-mount tin	Wurth or TE Connectivity	690367280876 or 7-2178711-8

Mechanical Drawing

Figure 34 shows the top-side mechanical drawing of the Type 7 board.

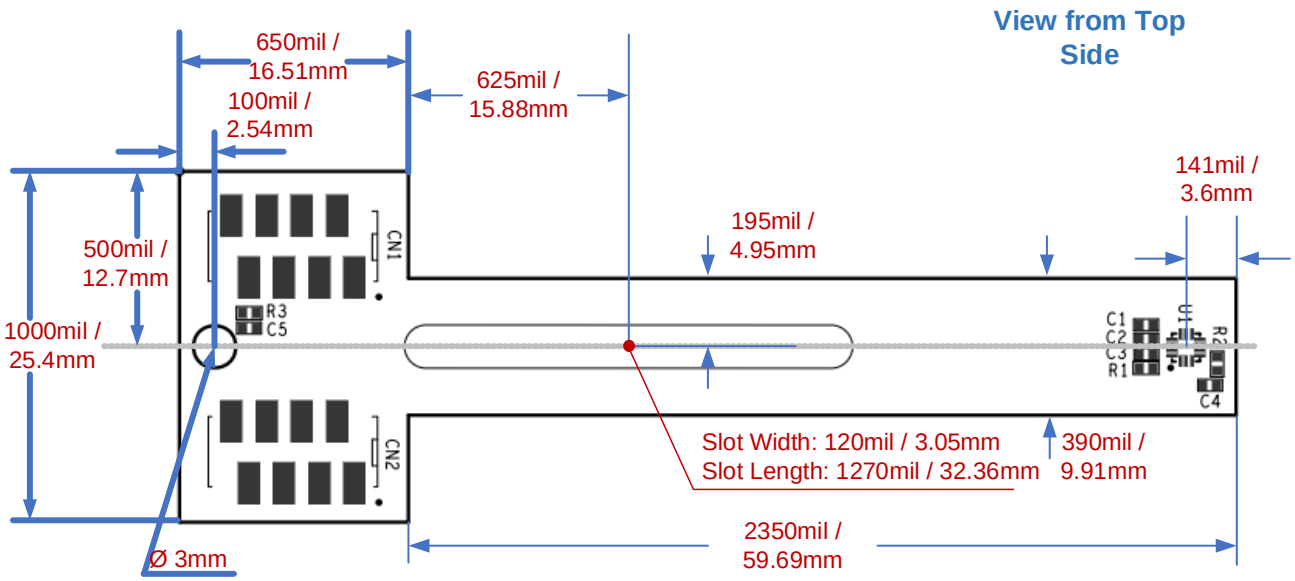

Figure 34: Type 7 Board Mechanical Drawing (mil = 0.001” = 0.0254mm)

MPS Proprietary Information. Patent Protected. Unauthorized Photocopy and Duplication Prohibited.
© 2023 MPS. All Rights Reserved.

Connector Pinout

Figure 35 shows the type 7 board connector pinout.

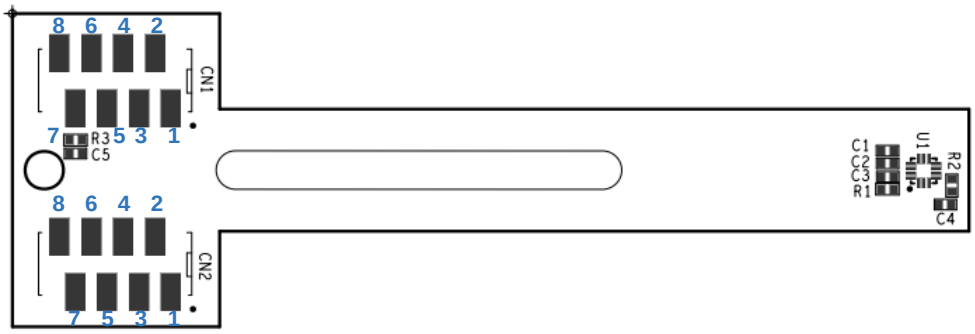

Figure 35: Type 7 Board Connector Pinout

Table 15 shows the type 7 board pin registers.

Table 15: Type 7 Board Connector Pin Registers

Pin	Name	Description
CN1.1	VDD	3.3V supply.
CN1.2	GND	Ground.
CN1.3	NC	Not connected.
CN1.4	/CS	Chip select (serial).
CN1.5	SCLK	Clock (serial).
CN1.6	MISO	Master in, slave out (serial).
CN1.7	MOSI	Master out, slave in (serial).
CN1.8	TEST	Test pin.
CN2.1	NC	Not connected.
CN2.2	IRQ	Interrupt on angle change (output).
CN2.3	NC	Not connected.
CN2.4	NC	Not connected.
CN2.5	ERR	Error flag (output).
CN2.6	NVM	Non-volatile memory (output).
CN2.7	MGL	Magnetic level low (output).
CN2.8	MGH	Magnetic level high (output).

MPS Proprietary Information. Patent Protected. Unauthorized Photocopy and Duplication Prohibited.
© 2023 MPS. All Rights Reserved.

MAGNET SUPPLIERS

A selection of magnets are available with MPS's MAG10 magnet product family. This family offers three different magnet geometries: cylinder, ring, and half-cylinder. Figure 36 shows the available magnet geometries. The MPS MAG10 magnet product family can be purchased directly from MPS.

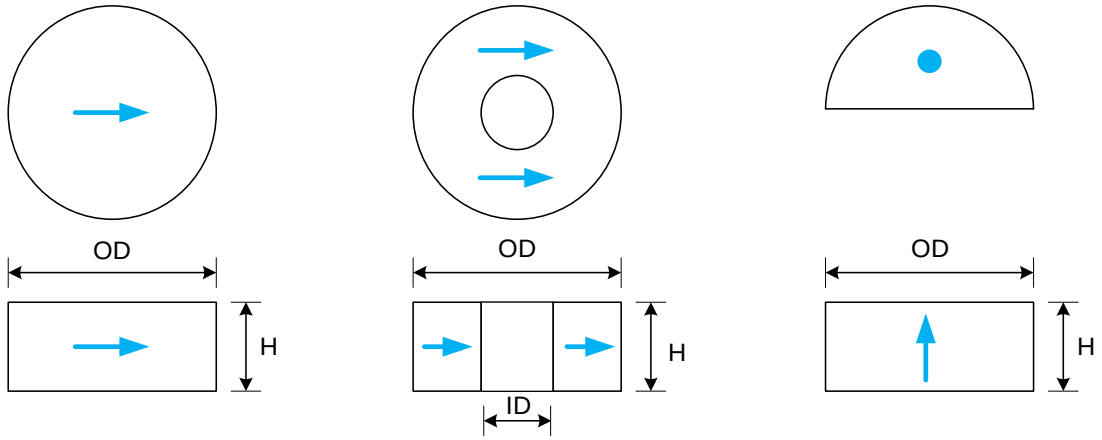

Figure 36: MPS's MAG10 Magnet Geometries

Visit our website learn more about our magnet portfolio:

https://www.monolithicpower.com/en/products/sensors/position-sensors/position-sensor-magnets.html

If the magnet required for your application is not listed on our website, consider the following non-exhaustive list of possible magnet suppliers (see Table 16). The magnetization direction must be selected given that most sold magnets are often axially magnetized, which is not a magnetization direction typically required in magnetic angle-sensing applications. Angle-sensing applications typically use diametrically magnetized magnets.

Table 16: Magnet Suppliers

Company	Website	Address	Comments
Bomatec AG	www.bomatec.com	Hofstrasse 1, 8181 Höri, Switzerland	An MPS partner for many projects.
Maurer Magnetics AG	www.maurermagnetic.ch	Industriestrasse 8 8627 Grüningen, Switzerland	Maurer offers a selection of diametrically magnetized magnets in stock.
Arnold Technologies AG	www.arnoldmagnetics.com	Hübelacherstrasse 15 5242 Birr-Lupfig, Switzerland	
Dexter Magnetic Technologies	www.dextermag.com	1050 Morse Avenue, Elk Grove Village, IL 60007-5110 USA	
JPMF	www.jpmf.com.cn	8 LongWan Road, Jiangmen City, GuangDong Province, China	Magnet overmolding.
IMA	www.imamagnets.com	Avda. Cataluña 5, 08291 Ripollet, Barcelona, Spain	Magnet overmolding, magnetic tapes.

MPS Proprietary Information. Patent Protected. Unauthorized Photocopy and Duplication Prohibited.
© 2023 MPS. All Rights Reserved.

REVISION HISTORY

Revision #	Revision Date	Description	Pages Updated
1.0	9/17/2020	Added TBMAQ family into list of board types; expanded Magnet Suppliers section and modified list of magnet suppliers; grammar and formatting updates	All
1.1	9/22/2021	Added Type 5 Board (MA734)	4, 25–29
1.2	12/7/2023	• Removed all content related to round type boards • Added Type 6 board (MA735) and Type 7 board (MA736) • Significant rewrite	All

Notice: The information in this document is subject to change without notice. Please contact MPS for current specifications. Users should warrant and guarantee that third-party Intellectual Property rights are not infringed upon when integrating MPS products into any application. MPS will not assume any legal responsibility for any said applications.

MPS Proprietary Information. Patent Protected. Unauthorized Photocopy and Duplication Prohibited.
© 2023 MPS. All Rights Reserved.